Bemak

FESTO

BEMAK OTOMASYON TIC.LTD.STI.
UCEVLER MH. 56. SK. AKNIL PLAZA NO 1B NILUFER BURSA - TURKEY - PHONE: +90 224 443 56 06 FAX: +90 224 443 56 07
bemak@bemakotomasyon.com - www.bemakotomasyon.com - www.bemakelektromarket.com

Selected products

Your partner for factory and process automation

Editorial 3
Wide range of industry segments – one competent partner. 4
Your partner for safety 6

Pneumatic drives 7 1

Electromechanical drives 49 2

Motors and controllers 79 3

Grippers 95 4

Handling systems 101 5

Vacuum technology 105 6

Valves 115 7

Valve terminals 149 8

Sensors 161 9

Compressed air preparation 177 10

Pneumatic connection technology 199 11

Electrical connection technology 225 12

Control technology and software 233 13

Other pneumatic equipment 237 14

Process automation 245 15

Festo services and support 277
Energy efficiency 279
Food and Packaging 280
Training and consulting 281

Highlights

DSBC

Standards-based cylinders to ISO 15552

+ Self-adjusting pneumatic end-position cushioning PPS
+ Comprehensive range of mounting accessories for just about every type of installation

Page 21

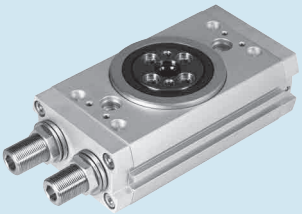

DRRD

Semi-rotary drives

+ Twin-piston rotary drive, power transmission via rack and pinion principle
+ Very high bearing load capacity

Page 42

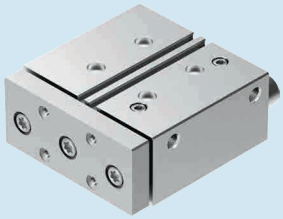

DFM

Guided drives

+ Minimum cycle times
+ High load capacity with integrated guides
+ Wide range of mounting options

Page 46

Contents

Product overview 9
Self-adjusting end-position cushioning PPS for standards-based cylinders 16
Compact cylinders ADN, to ISO 21287, double-acting 18
Standards-based cylinders DSBC, to ISO 15552, double-acting 21
Standards-based cylinders DSBG, to ISO 15552, double-acting 24
Standards-based cylinders DSBF-C, to ISO 15552, Clean Design 26
Round cylinders DSNU, to ISO 6432, double-acting 28
Round cylinders CRDSNU, stainless steel 30
Short-stroke cylinders ADVC, AEVC, double-acting/single-acting 32
Linear drives DGC-K, double-acting 35
Linear drives DGC, double-acting 37
Semi-rotary drives DRVS, double-acting 40
Twin-piston semi-rotary drives DRRD, double-acting 42
Mini slides DGSL, double-acting 44
Guided drives DFM, double-acting 46
Piston rod attachments SG, SGS, FK 48

FESTO

Software tool

Pneumatic sizing	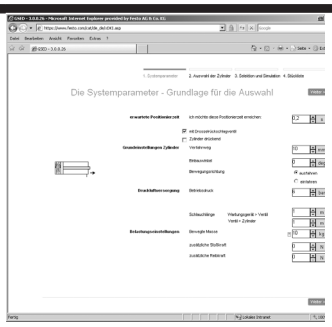	Perfect simulations replace expensive actual tests. The tool is an expert system that supports you in the selection and configuration of the entire pneumatic control chain. If one parameter is changed, the program automatically adapts all the others.	This tool can be found • on our website at www.festo.com/catalogue by clicking on the blue button “Engineering”
Festo Design Tool 3D FDT 3D	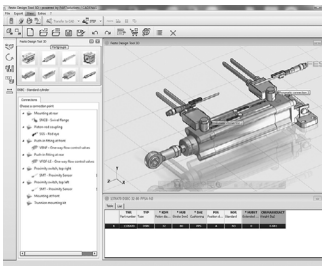	The Festo Design Tool 3D is a 3D product configurator for generating specific CAD product combinations from Festo. The configurator makes your search for the right accessory easier, more reliable and faster. You can then order the module that has been created as a single order item – either completely pre-assembled or as individual parts in a single box. As a result, your bill of materials is considerably shortened and downstream processes such as product ordering, order picking and assembly are significantly simplified.	All ordering options are available in the following countries: AT, BE, CH, CZ, DE, DK, ES, EST, FI, FR, GB, GR, HU, IE, IT, NL, NO, PL, PT, RU, SE, SI, SK, TR, ZA. This tool can be found • via the address: www.festo.com/FDT-3D in the above listed countries.

1

Standards-based cylinders

	Compact cylinders ADN	Standards-based cylinders DSBC	Standards-based cylinders DSBG	Standards-based cylinders DSBG
Mode of operation	Double-acting	Double-acting	Double-acting	Double-acting
Piston diameter	12 mm, 16 mm, 20 mm, 25 mm, 32 mm, 40 mm, 50 mm, 63 mm, 80 mm, 100 mm, 125 mm	32 mm, 40 mm, 50 mm, 63 mm, 80 mm, 100 mm, 125 mm	32 mm, 40 mm, 50 mm, 63 mm, 80 mm, 100 mm, 125 mm	160 mm, 200 mm, 250 mm, 320 mm
Theoretical force at 6 bar, advancing	51 … 7363 N	415 … 7363 N	415 … 7363 N	12064 … 48255 N
Stroke	1 … 500 mm	1 … 2800 mm	1 … 2800 mm	1 … 2700 mm
Cushioning	Elastic cushioning rings/pads at both ends, self-adjusting pneumatic end-position cushioning	Elastic cushioning rings/pads at both ends, self-adjusting pneumatic end-position cushioning, pneumatic cushioning, adjustable at both ends	Elastic cushioning rings/pads at both ends, self-adjusting pneumatic end-position cushioning, pneumatic cushioning, adjustable at both ends	Elastic cushioning rings/pads at both ends, pneumatic cushioning, adjustable at both ends
Description	• ISO 21287 • Up to 50% less installation space than comparable standards-based cylinders to ISO 15552 • Piston rod with female or male thread • Wide range of variants for customised applications • For position sensing	• ISO 15552 (ISO 6431, VDMA 24562) • Self-adjusting pneumatic end-position cushioning which adapts optimally to changes in load and speed • For position sensing • Wide range of variants for customised applications • Comprehensive range of mounting accessories for just about every type of installation • For position sensing	• ISO 15552 (ISO 6431, VDMA 24562) • Sturdy tie rod design • Self-adjusting pneumatic end-position cushioning which adapts optimally to changes in load and speed • Comprehensive range of mounting accessories for just about every type of installation • For position sensing	• ISO 15552 (ISO 6431, VDMA 24562) • Sturdy tie rod design • Pneumatic end-position cushioning adjustable at both ends • Optionally without end-position cushioning and position sensing, resulting in a price advantage • Optionally with spacer bolt attachment • For position sensing
➔ Page/online	**18**	**21**	**dsbg**	**24**

Standards-based cylinders

	Standards-based cylinders, Clean Design DSBF	Round cylinders DSNU
Mode of operation	Double-acting	Double-acting
Piston diameter	32 mm, 40 mm, 50 mm, 63 mm, 80 mm, 100 mm, 125 mm	8 mm, 10 mm, 12 mm, 16 mm, 20 mm, 25 mm
Theoretical force at 6 bar, advancing	415 … 7363 N	23 … 295 N
Stroke	1 … 2800 mm	1 … 500 mm
Cushioning	Elastic cushioning rings/pads at both ends, self-adjusting pneumatic end-position cushioning, pneumatic cushioning, adjustable at both ends	Elastic cushioning rings/pads at both ends, self-adjusting pneumatic end-position cushioning, pneumatic cushioning, adjustable at both ends
Description	• ISO 15552 • Increased corrosion protection • Easy-to-clean design • FDA-approved lubrication and sealing on the basic design • Long service life thanks to optional dry-running seal • Self-adjusting pneumatic end-position cushioning which adapts optimally to changes in load and speed • For position sensing	• ISO 6432 • Wide range of variants for customised applications • Good running performance and long service life • Self-adjusting pneumatic end-position cushioning which adapts optimally to changes in load and speed • Piston rod with female or male thread • For position sensing
➔ Page/online	**26**	**28**

FESTO

1

Round cylinders

	 Round cylinders DSNU
Mode of operation	Double-acting
Piston diameter	32 mm, 40 mm, 50 mm, 63 mm
Theoretical force at 6 bar, advancing	482.5 ... 1870.3 N
Stroke	1 ... 500 mm
Cushioning	Elastic cushioning rings/pads at both ends, self-adjusting pneumatic end-position cushioning, pneumatic cushioning, adjustable at both ends
Description	• Wide range of variants for customised applications • Good running performance and long service life • Self-adjusting pneumatic end-position cushioning which adapts optimally to changes in load and speed • Piston rod with female or male thread • For position sensing
➔ **Page/online**	**dsnu**

Stainless-steel cylinders

	 Round cylinders CRDSNU, **CRDSNU-B**	 **Round cylinders** CRDSNU, **CRDSNU-B**
Mode of operation	Double-acting	Double-acting
Piston diameter	12 mm, 16 mm, 20 mm, 25 mm	32 mm, 40 mm, 50 mm, 63 mm
Theoretical force at 6 bar, advancing	68 ... 295 N	483 ... 1870 N
Stroke	1 ... 500 mm	1 ... 500 mm
Cushioning	elastische Dämpfungsringe/-platten beidseitig, selbsteinstellende pneumatische Endlagendämpfung, pneumat. Dämpfung beidseitig einstellbar	elastische Dämpfungsringe/-platten beidseitig, selbsteinstellende pneumatische Endlagendämpfung, pneumat. Dämpfung beidseitig einstellbar
Description	• Elastic cushioning rings/plates at both ends, self-adjusting pneumatic end-position cushioning, pneumatic cushioning, adjustable at both ends • Corrosion resistant against aggressive ambient conditions • Easy-to-clean design • Long service life thanks to optional unlubricated seal • Wide range of variants for customised applications • "Self-adjusting pneumatic end-position cushioning which adapts optimally to changes in load and speed" • For position sensing • ISO 6432	• Elastic cushioning rings/plates at both ends, self-adjusting pneumatic end-position cushioning, pneumatic cushioning, adjustable at both ends • Corrosion resistant against aggressive ambient conditions • Easy-to-clean design • Long service life thanks to optional unlubricated seal • Wide range of variants for customised applications • "Self-adjusting pneumatic end-position cushioning which adapts optimally to changes in load and speed" • For position sensing
➔ **Page/online**	**30**	**30**

FESTO

1

Compact, short-stroke and flat cylinders

	 Compact cylinders **ADN**	 **Short-stroke cylinders** **ADVC, AEVC**
Mode of operation	Double-acting	Double-acting, pushing, single-acting
Piston diameter	12 mm, 16 mm, 20 mm, 25 mm, 32 mm, 40 mm, 50 mm, 63 mm, 80 mm, 100 mm, 125 mm	4 mm, 6 mm, 10 mm, 12 mm, 16 mm, 20 mm, 25 mm, 32 mm, 40 mm, 50 mm, 63 mm, 80 mm, 100 mm
Theoretical force at 6 bar, advancing	51 ... 7363 N	4.9 ... 4712 N
Stroke	1 ... 500 mm	2.5 ... 25 mm
Cushioning	Elastic cushioning rings/pads at both ends, self-adjusting pneumatic end-position cushioning	Elastic cushioning rings/pads at both ends
Description	• Up to 50% less installation space than comparable standards-based cylinders to ISO 15552 • Piston rod with female or male thread • Wide range of variants for customised applications • For position sensing • ISO 21287	• Very short overall length • High forces in a compact size • Piston rod with female or male thread • For position sensing via proximity sensor for T-slot and for C-slot • Mounting hole pattern to VDMA 24562 as of diameter 32 mm
➔ Page/online	**18**	**32**

Rodless cylinders

	 Linear drives **DGC-K**	 **Linear drives** **DGC-G, DGC-GF, DGC-KF**
Piston diameter	18 mm, 25 mm, 32 mm, 40 mm, 50 mm, 63 mm, 80 mm	8 mm, 12 mm, 18 mm, 25 mm, 32 mm, 40 mm, 50 mm, 63 mm
Theoretical force at 6 bar, advancing	153 ... 3016 N	30 ... 1870 N
Stroke	1 ... 8500 mm	1 ... 8500 mm
Cushioning	Pneumatic cushioning, adjustable at both ends	Elastic cushioning rings/pads at both ends, pneumatic cushioning, adjustable at both ends, shock absorber, hard characteristic curve, shock absorber, soft characteristic curve
Position sensing	Via proximity sensor	Via proximity sensor
Description	• Compact design: 30% smaller than the basic design DGC-G • Basic drive without guide, for simple drive functions • Low moving dead weight • Symmetrical design • Fully interchangeable with linear drive DGP	• Basic design, plain or recirculating ball bearing guide • All settings accessible from one side • Optionally with variable end stops and intermediate position module • Software tool available for bearing calculation • Optional: NSF-H1 lubricant for the food zone • Optional: clamping unit for holding loads
➔ Page/online	**35**	**37**

FESTO

1

Software tool

Mass moment of inertia	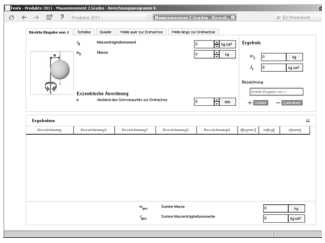	Juggling pencils and pocket calculators is now a thing of the past. No matter whether you have discs, blocks, push-on flanges, grippers, etc., this tool does the job of calculating all the mass moments of inertia. Just save, send or print and you're finished.	This tool can be found • on our website at www.festo.com/catalogue by clicking on the blue button "Engineering"

Semi-rotary drives

	 Semi-rotary drives **DRVS**	 **Semi-rotary drives** **DRRD**
Size	6, 8, 12, 16, 25, 32, 40	8, 10, 12, 16, 20, 25, 32, 35, 40, 50, 63
Theoretical torque at 6 bar	0.15 … 20 Nm	0.2 … 112 Nm
Permissible mass moment of inertia	6.5 … 350 kgcm²	0.0015 … 42 kgm²
Position sensing	Without	Via proximity sensor
Swivel angle	0 … 270°	180°
Description	• Double-acting semi-rotary drive with rotary vanes • Lighter than other semi-rotary drives • Fixed swivel angle, adjustable swivel angle possible with the help of accessories • Housing protected against splash water and dust	• Twin-piston rotary drive, power transmission via rack and pinion principle • Very high accuracy in the end positions • Very high bearing load capacity • Very good axial run-out at the flanged shaft
➔ Page/online	**40**	**42**

Drives with slides

	 Mini slides **DGSL**
Piston diameter	6 mm, 8 mm, 10 mm, 12 mm, 16 mm, 20 mm, 25 mm, 32 mm
Theoretical force at 6 bar, advancing	17 … 483 N
Stroke	10 … 200 mm
Cushioning	Short elastic cushioning rings/pads at both ends, no cushioning, elastic cushioning rings/pads at both ends with fixed stop, elastic cushioning rings/pads at both ends, shock absorber, self-adjusting, progressive, at both ends, with reducing sleeve, shock absorber, progressive, at both ends
Position sensing	Via proximity sensor
Description	• High load capacity and positioning accuracy • Maximum movement precision thanks to ground-in ball bearing cage guide • Maximum flexibility thanks to 8 sizes • Reliable in the event of pressure drop thanks to clamping cartridge or end-position locking • Wide variety of mounting and attachment options • Compact design
➔ Page/online	**44**

FESTO

1

Drives with guide rods

	 Guided drives **DFM, DFM-B**
Piston diameter	12 mm, 16 mm, 20 mm, 25 mm, 32 mm, 40 mm, 50 mm, 63 mm, 80 mm, 100 mm
Theoretical force at 6 bar, advancing	68 … 4712 N
Stroke	10 … 400 mm
Cushioning	Elastic cushioning rings/pads at both ends, pneumatic cushioning, adjustable at both ends, shock absorber, soft characteristic curve
Position sensing	Via proximity sensor
Description	• Drive and guide unit in a single housing • Plain or recirculating ball bearing guide • High resistance to torques and lateral forces • Wide range of mounting options • Wide range of variants for customised applications
➔ **Page/online**	**46**

Quarter turn actuators for process automation

	 Quarter turn actuators **DAPS**	 **Quarter turn actuators** **DFPD**
Design	Scotch yoke system	Rack and pinion principle
Mode of operation	Double-acting, single-acting	Double-acting, single-acting
Size of valve actuator	0008, 0015, 0030, 0053, 0060, 0090, 0106, 0120, 0180, 0240, 0360, 0480, 0720, 0960, 1440, 1920, 2880, 3840, 4000, 5760, 8000	10, 20, 40, 80, 120, 160, 240, 300, 480
Flange hole pattern	F03, F04, F05, F07, F10, F12, F14, F16, F25	F03, F04, F05, F0507, F0710, F1012
Operating pressure	1 … 8.4 bar	2 … 8 bar
Ambient temperature	-50 … 150 °C	-20 … 80 °C
Description	• High breakaway torques • Approved in accordance with Directive 2014/34/EU (ATEX) • Flange hole pattern to ISO 5211 • Mounting hole pattern to VDI/VDE 3845 • Optionally with handwheel as a manual emergency override • Corrosion-resistant, stainless steel version	• Uniform torque characteristic across the entire rotation angle of 90° • Process valve connection to ISO 5211 on both sides • Can be mounted on all process valves using pressure relief slot • Mounting hole pattern to VDI/VDE 3845 • Sturdy, non-slip and easy-to-clean aluminium housing • Long service life, low wear • Increased corrosion protection
➔ **Page/online**	**daps**	**261**

FESTO

Linear actuators for process automation

	Linear actuators with displacement encoder DFPI-NB3P	Linear actuators with displacement encoder DFPI
Design	Piston rod, cylinder barrel	Piston rod, cylinder barrel
Mode of operation	Double-acting	Double-acting
Size of valve actuator	100 mm, 125 mm, 160 mm, 200 mm, 250 mm, 320 mm	100, 125, 160, 200, 250, 320
Flange hole pattern		F07, F10, F14
Operating pressure	3 ... 8 bar	3 ... 8 bar
Ambient temperature	–20 ... 80	–20 ... 80 °C
Description	• Standards-based linear actuators to ISO 15552 • Easy connection to external positioners • Ideal for use under harsh ambient conditions • IP65, IP67, IP69K, NEMA4 • ATEX 2GD certification	• Closed-loop controlled actuator for all linear process valves • Optionally with integrated positioner and valve block • Position feedback via analogue 4 ... 20 mA signal for simple diagnostics • Easy integration into existing control architecture • Sturdy and compact housing for use outdoors • Connection for process valves to DIN 3358
➔ **Page/online**	dfpi	dfpi

Accessories for pneumatic drives

	Mounting attachments	**Piston-rod attachments**
Description	• Mounting kits DARQ • Direct mountings • Foot mountings • Flange mountings • Swivel mountings • Clevis feet LNG, trunnion supports LNZ • Slot nuts NST/NSTL • Centring pins/sleeves NSTH	• Rod clevises SG, CRSG • Rod eyes SGS • Coupling pieces KSG • Self-aligning rod couplers FK • Adapters AD
➔ **Page/online**	n_015001	48

Customised components – for your specific requirements

Drives with customised designs
Can't find the pneumatic drive you need in our catalogue?
We can offer you customised components that are tailored to your specific requirements.

Common product modifications:
- Materials for special ambient conditions
- Customised dimensions
- Special strokes
- Customised mounting options
- Implementation of special cylinder functions (cylinder/valve combinations, single-acting principle, etc.)

Many additional variants are possible. Ask your Festo sales engineer, who will be happy to help.
➔ **www.festo.com/contact**

FESTO

1

More productivity, less work: PPS

Simply ingenious: the uniquely self-adjusting end-position cushioning PPS saves massive amounts of time during assembly, adjusts optimally to changes in load and speed and allows the cylinder to move dynamically and gently into the end position. This reduces wear on the entire system.

This and many other advantages are the result of the unique design with longitudinal slots which allow air to escape.

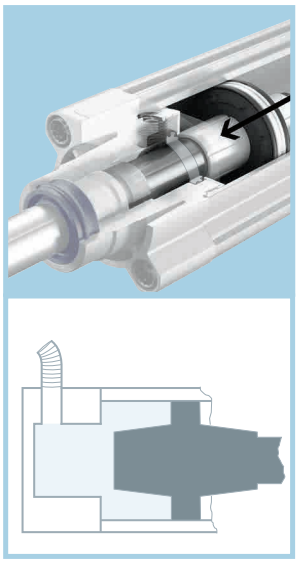

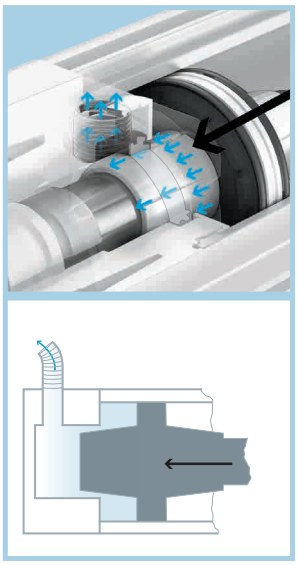

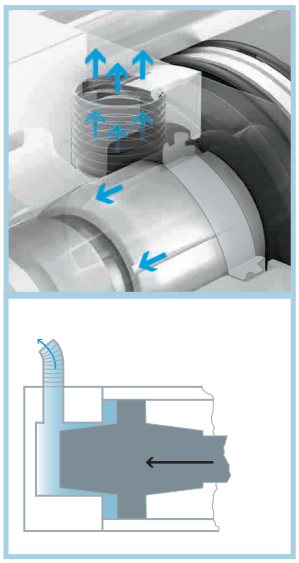

Utilise the advantages of PPS – in these cylinders

DSBC

DSBF

DSBG

DSNU

CRDSNU

ADN

ADNGF

Software tool

Festo Design Tool 3D
FDT 3D

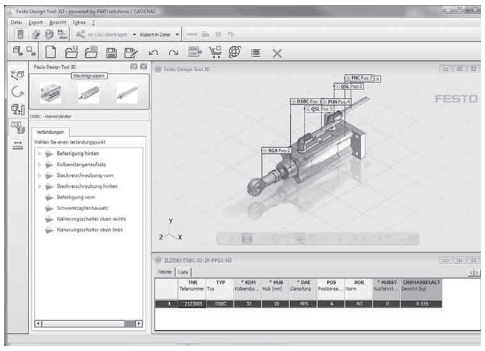

The Festo Design Tool 3D is a 3D product configurator for generating specific CAD product combinations from Festo. The configurator makes your search for the right accessory easier, more reliable and faster.

You can then order the module that has been created as a single order code – either completely pre-assembled or as individual parts in a single box. As a result, your bill of materials is considerably shortened and downstream processes such as product ordering, order picking and assembly are significantly simplified.
All ordering options are available in the following countries: AT, BE, CH, CZ, DE, DK, ES, EST, FI, FR, GB, GR, HU, IE, IT, NL, NO, PL, PT, RU, SE, SI, SK, TR, ZA.

This tool can be found
- via the address: www.festo.com/FDT-3D in the above listed countries.

FESTO

Less can be more: the advantages of self-adjusting cushioning at a glance

Less shock
Running smoothly, Part 1: The better the cushioning, the less settling and impact vibration. Better for the cylinder, better for the machine.

Less noise
Running smoothly, Part 2: Where there is no vibration, there is nothing to disturb the working environment of both workers and machines.

Less adjustment
Goodbye screwdriver. Not just less adjustment, but no adjustment at all! Standard cylinders with PPS are self-adjusting.

Less cleaning
A clean solution. No cushioning screws cuts dust and dirt traps and makes for smoother surfaces. In other words, adjusting-screw-free.

Less variants
Relaxed purchasing. Cylinders with PPS cushioning have a far wider operating range than most standard cylinders. The result is fewer variants with more application options.

Less wear
Self-adjusting means always perfectly set. Perfectly set cushioning means that cylinders operate more smoothly and longer. More machine uptime and greater throughput.

Less time
Save time and effort in adjusting. The calculation is simple: no. of cylinders x 5 mins = big cost saving.

Less errors
Always correct. All by itself. PPS cushioning prevents setting errors and automatically compensates for changing loads.

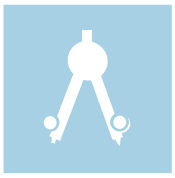

Less planning
Making it easy – setting multiple cylinders to run in parallel is a nightmare. PPS self-adjusting cushioning simplifies the task and improves performance. Simply fit and forget.

Less bulky
Compact cylinders ADN-PPS offer up to 300% more end of stroke energy absorption. Smaller or more powerful, the choice is yours.

Less risk
No screws, no setting on live machinery; safer and faster. And no operator fiddling.

Less stock
Less is more. Your finance department will think so too. PPS cushioning enables a narrower range of cylinders to cover the same performance range. And less stock = lower costs.

Compact cylinders ADN, to ISO 21287, double-acting

FESTO

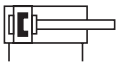

- Compact cylinders with standard dimensions
- Up to 50% less installation space than comparable standards-based cylinders to ISO 15552
- Innovative technology for maximum speeds
- Flexible in use thanks to easy-to-configure variants
- Selected types in accordance with ATEX directive for potentially explosive atmospheres
  ➔ **www.festo.com/en/ex**

Order code – Basic design

001	002	003	004	005	006	007	008	009	010	011	012	013	014	015	016
ADN	–	–	–	–	– A	–	–	–	–	–	–	–	–	–	–

001	Type
ADN	Double-acting standards-based cylinder

002	Piston diameter [mm]
...	12, 16, 20, 25, 32, 40, 50, 63, 80, 100, 125

003	Stroke [mm]
...	5, 10, 15, 20, 25, 30, 40, 50, 60, 80 1 ... 500

004	Piston rod thread
O	Male thread
I	Female thread

005	Cushioning
P	Elastic cushioning rings/pads at both ends
PPS	Pneumatic cushioning, self-adjusting at both ends

006	Position sensing
O	Via proximity sensor

007	Protection against rotation
–	Without

008	Piston rod type
–	Piston rod at one end

009	Thermal resistance
–	Standard

010	Slow speed
–	Without

011	Low friction
–	Standard

012	Increased lateral force
–	Without

013	Captive rating plate
–	Rating plate, glued

014	Low temperature
–	Without

015	Wiper seal
–	Standard

016	EU certification (ATEX)
–	Without

Legend: Mandatory entry Optional entry

Product options

1 ... 500 mm	Variable stroke
Q	Square piston rod
K8	Extended piston rod
S1	Reinforced piston rod
S2	Through piston rod
S20	Through, hollow piston rod
K2	Extended male piston rod thread
K5	Special piston rod thread
K10	Smooth anodised aluminium piston rod
S6	Heat-resistant seals up to max. 120 °C
S10	Slow speed
S11	Low friction
R3	High corrosion protection
R8	Dust protection
TL	Laser etched rating plate
TT	Low temperature
KP	With clamping unit, attached
EL...	With end-position locking

Ordering – Product options

Configurable product

This product and all its product options can be ordered using the configurator.

The configurator can be found under Products at
➔ **www.festo.com/catalogue/...**

Enter the type or the configuration part number in the search field.

FESTO

Configuration part no.

002 Piston dia. [mm]	Type	Part no.
12	ADN-12-...-P-A	536203
16	ADN-16-...-P-A	536218
20	ADN-20-...-P-A	536233
25	ADN-25-...-P-A	536250
32	ADN-32-...-P-A	536267
40	ADN-40-...-P-A	536288

002 Piston dia. [mm]	Type	Part no.
50	ADN-50-...-P-A	536309
63	ADN-63-...-P-A	536330
80	ADN-80-...-P-A	536351
100	ADN-100-...-P-A	536372
125	ADN-125-...-P-A	536393

Ordering – Basic design

003 **Stroke [mm]**	002 **Piston dia. [mm]**								
	12	16	20	25	32	40	50	63	80
	004 **Piston rod thread** – 005 **Cushioning** – 006 **Position sensing**								
	A – P – A	**A – P – A**	**A – P – A**	**A – P – A**	**A – P – A**	**A – P – A**	**I – P – A**	**I – P – A**	**I – P – A**
5	536204	536219	536234	536251	536268	536289	536310		
10	536205	536220	536235	536252	536269	536290	536311	536332	536353
15	536206	536221	536236	536253	536270	536291	536312	536333	536354
20	536207	536222	536237	536254	536271	536292	536313	536334	536355
25	536208	536223	536238	536255	536272	536293	536314	536335	536356
30	536209	536224	536239	536256	536273	536294	536315	536336	536357
40	536210	536225	536240	536257	536274	536295	536316	536337	536358
50		536331	536241	536258	536275	536296	536317	536338	536359
60			536352	536373	536276	536297	536318	536339	536360
80					536277	536298	536319	536340	536361
					A – PPS – A	**A – PPS – A**	**A – PPS – A**	**A – PPS – A**	**A – PPS – A**
10					572655	572673	572691	572709	572727
15					572656	572674	572692	572710	572728
20					572657	572675	572693	572711	572729
25					572658	572676	572694	572712	572730
30					572659	572677	572695	572713	572731
40					572660	572678	572696	572714	572732
50					572661	572679	572697	572715	572733
60					572662	572680	572698	572716	572734
80					572663	572681	572699	572717	572735
	I – P – A	**I – P – A**	**I – P – A**	**I – P – A**	**I – P – A**	**I – P – A**	**I – P – A**	**I – P – A**	**I – P – A**
5	536211	536226	536242	536259	536278	536299	536320		
10	536212	536227	536243	536260	536279	536300	536321	536342	536363
15	536213	536228	536244	536261	536280	536301	536322	536343	536364
20	536214	536229	536245	536262	536281	536302	536323	536344	536365
25	536215	536230	536246	536263	536282	536303	536324	536345	536366
30	536216	536231	536247	536264	536283	536304	536325	536346	536367
40	536217	536232	536248	536265	536284	536305	536326	536347	536368
50		536341	536249	536266	536285	536306	536327	536348	536369
60			536362	536383	536286	536307	536328	536349	536370
80					536287	536308	536329	536350	536371
					I – PPS – A	I – PPS – A	I – PPS – A	I – PPS – A	I – PPS – A
10					572646	572664	572682	572700	572718
15					572647	572665	572683	572701	572719
20					572648	572666	572684	572702	572720
25					572649	572667	572685	572703	572721
30					572650	572668	572686	572704	572722
40					572651	572669	572687	572705	572723
50					572652	572670	572688	572706	572724
60					572653	572671	572689	572707	572725
80					572654	572672	572690	572708	572726

Compact cylinders ADN, to ISO 21287, double-acting

P and PPS cushioning

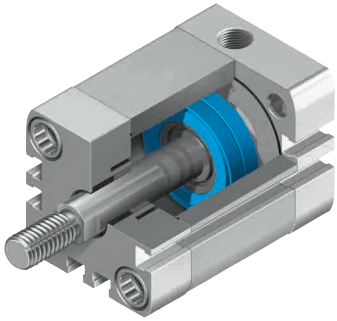

ADN-32-...-A-P-A
Compact cylinder ADN-32-...-A-P-A with
- male piston rod thread,
- elastic cushioning rings/pads at both ends and
- position sensing via proximity sensors

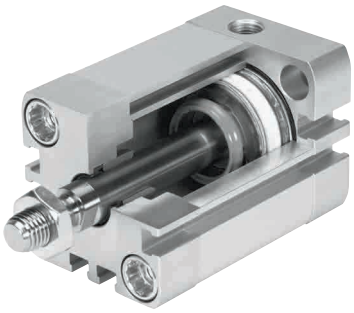

ADN-32-...-A-PPS-A
Compact cylinder ADN-32-...-A-PPS-A with
- male piston rod thread,
- pneumatic cushioning, self-adjusting at both ends and
- position sensing via proximity sensors

Accessories

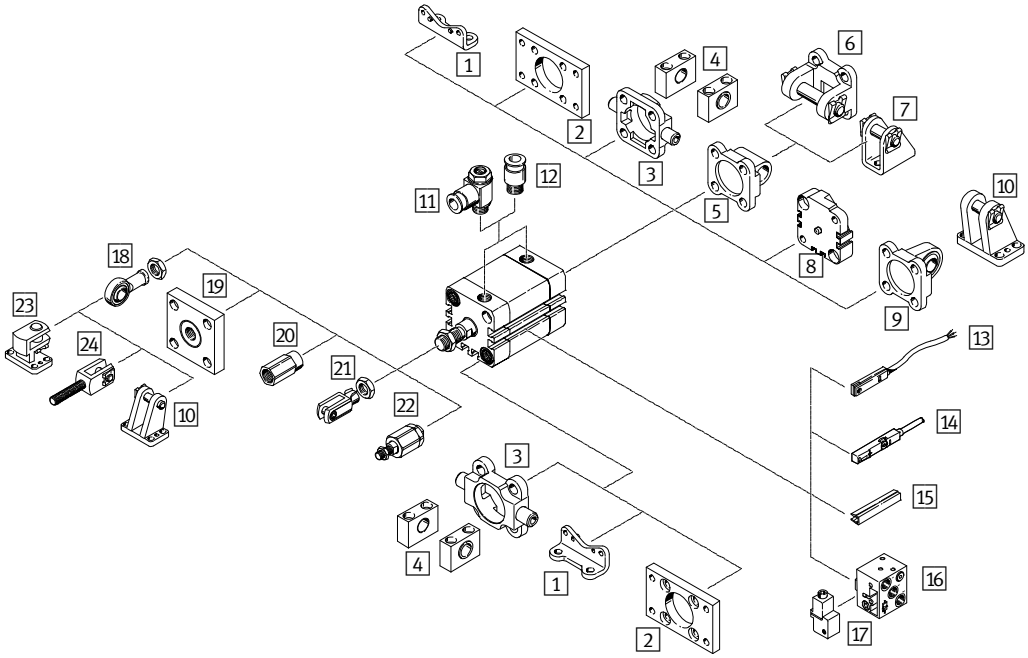

1 Foot mounting HNA ➔ 20
2 Flange mounting FNC ➔ 23
3 Trunnion flange ZNCF ➔ 23
4 Trunnion support LNZG ➔ 23
Swivel flange SNCL ➔ 23
6 Swivel flange SNCB ➔ 23
7 Clevis foot LBN ➔ 29
8 Multi-position kit DPNA ➔ 20
9 Swivel flange SNCS ➔ 23
10 Clevis foot LBG ➔ lbg
11 One-way flow control valve GRLA/GLRZ ➔ 147
12 Push-in fitting QS ➔ 212
13 Proximity sensor SME-/SMT-8 ➔ sme-8
Connecting cable NEBU ➔ 20
14 Proximity sensor SME-/SMT-8M ➔ 166
Connecting cable NEBU ➔ 20
15 Slot cover ABP-5-S ➔ abp-5
16 Proximity sensor SMPO-8E ➔ smpo-8e

17 Mounting kit SMB-8E ➔ smb-8e
18 Rod eye SGS ➔ 48
19 Coupling piece KSG/KSZ ➔ ksg
20 Adapter AD ➔ ad
21 Rod clevis SG ➔ 48
22 Self-aligning rod coupler FK ➔ 48
23 Right-angle clevis foot LQG ➔ 23
24 Rod clevis SGA ➔ 20

1 Foot mounting HNA

For dia.	Type	Part no.
12	HNA-12	537237
16	HNA-16	537238
20	HNA-20	537239
25	HNA-25	537240
32	HNA-32	537241
40	HNA-40	537242
50	HNA-50	537243
63	HNA-63	537244
80	HNA-80	537249

8 Multi-position kit DPNA

For dia.	Type	Part no.
12	DPNA-12	537263
16	DPNA-16	537264
20	DPNA-20	537265
25	DPNA-25	537266
32	DPNA-32	537267
40	DPNA-40	537268
50	DPNA-50	537269
63	DPNA-63	537270
80	DPNA-80	537271

13/14 Connecting cable NEBU

For size	Description	Type	Part no.
M8x1, 3-pin, with cable			
12 ... 125	Straight socket, 2.5 m	NEBU-M8G3-K-2.5-LE3	541333
	Straight socket, 5 m	NEBU-M8G3-K-5-LE3	541334
12 ... 125	Angled socket, 2.5 m	NEBU-M8W3-K-2.5-LE3	541338
	Angled socket, 5 m	NEBU-M8W3-K-5-LE3	541341
M12x1, 5-pin, with cable			
12 ... 125	Straight socket, 2.5 m	NEBU-M12G5-K-2.5-LE3	541363
	Straight socket, 5 m	NEBU-M12G5-K-5-LE3	541364
12 ... 125	Angled socket, 2.5 m	NEBU-M12W5-K-2.5-LE3	541367
	Angled socket, 5 m	NEBU-M12W5-K-5-LE3	541370

24 Rod clevis SGA

For dia.	Type	Part no.
32, 40	SGA-M10x1,25	32954
50, 63	SGA-M12x1,25	10767
80	SGA-M16x1.25	10768

Standards-based cylinders DSBC, to ISO 15552, double-acting

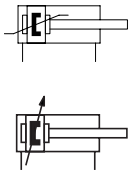

- Strokes of up to 2800 mm
- Excellent flexibility thanks to wide range of variants
- Extensive range of accessories makes it possible to install the cylinder virtually anywhere
- Selected types in accordance with ATEX directive for potentially explosive atmospheres
  ➔ **www.festo.com/en/ex**

Order code – Basic design

001	002	003	004	005	006	007	008	009	010
DSBC	–	–	–	–	–	–	–	A	– N3

Legend: Mandatory entry; Optional entry

001	Type
DSBC	Double-acting standards-based cylinder

002	Protection against rotation
–	Without protection against rotation

003	Running characteristics
–	Standard

004	Piston diameter [mm]
...	32, 40, 50, 63, 80

005	Stroke [mm]
...	20, 25, 30, 40, 50, 60, 70, 80, 100, 125, 150, 160, 200, 250, 300, 320, 400, 500

006	Piston rod type
–	At one end

007	Piston rod thread type
–	Male thread

008	Cushioning
PPV	Pneumatic cushioning, adjustable at both ends
PPS	Pneumatic cushioning, self-adjusting at both ends

009	Position sensing
O	Via proximity sensor

010	Standard
–	Based on ISO 15552
N3	Conforms to ISO 15552

Product options

100, 125 mm Piston diameter
1 ... 2800 mm Variable stroke

- Q With protection against rotation
- L Running characteristic low friction
- U Uniformly slow movement
- L1 Low friction for balancer applications
- C Clamping unit attached
- E1 End-position locking at both ends
- E2 End-position locking with advanced piston rod
- E3 End-position locking with retracted piston rod
- T Through piston rod
- F Female piston rod thread
- D3 Sensor slot on 3 sides
- P Elastic cushioning rings/pads at both ends
- R3 High corrosion protection
- T1 Heat-resistant seals up to max. 120 °C
- T3 Low temperature
- T4 Heat-resistant seals up to max. 150 °C
- P2 Bellows on bearing cap
- A1 Increased chemical resistance
- A2 Hard wiper seal
- A3 Suitable for unlubricated operation
- A6 Metal wiper seal
- EX4 EU certification (II 2GD)
- ...E Piston rod extension
- ...L Piston rod thread extension

Ordering – Product options

Configurable product

This product and all its product options can be ordered using the configurator.

The configurator can be found under Products at
➔ **www.festo.com/catalogue/...**

Enter the type or the configuration part number in the search field.

Configuration part no.

004 Piston dia. [mm]	Type	Part no.
32	DSBC-...–32-...-A-...	1463250
40	DSBC-...–40-...-A-...	1461995
50	DSBC-...–50-...-A-...	1463770
63	DSBC-...–63-...-A-...	1463475

004 Piston dia. [mm]	Type	Part no.
80	DSBC-...–80-...-A-...	1463495
100	DSBC-...–100-...-A-...	1463520
125	DSBC-...–125-...-A-...	1722457

Standards-based cylinders DSBC, to ISO 15552, double-acting

Ordering – Basic design

005 Stroke [mm]	004 Piston dia. [mm]					004 Piston dia. [mm]				
	32	40	50	63	80	32	40	50	63	80
	008 Cushioning – 009 Position sensing					008 Cushioning – 009 Position sensing				
	PPV A	PPV A	PPV A	PPV A	PPV A	PPS A	PPS A	PPS A	PPS A	PPS A
20	2123069	2123166	2098969	2125490	2126594	2123085	2123780	2102628	2126684	2126636
25	1376422	1376656	1366948	1383578	1383333	1376467	1376903	1376301	1383632	1383366
30	2123070	2123167	2098970	2125491	2126595	2123086	2123781	2102629	2126685	2126637
40	1376423	1376657	1366949	1383579	1383334	1376468	1376904	1376304	1383633	1383367
50	1376424	1376658	1366950	1383580	1383335	1376469	1376905	1376305	1383634	1383368
60	2123071	2123224	2098972	2125492	2126597	2123087	2123782	2102630	2126686	2126638
70	2123072	2123225	2098973	2125493	2126598	2123088	2123783	2102631	2126687	2126639
80	1376425	1376659	1366951	1383581	1383336	1376470	1376906	1376306	1383635	1383369
100	1376426	1376660	1366952	1383582	1383337	1376471	1376907	1376307	1383636	1383370
125	1376427	1376661	1366953	1383583	1383338	1376472	1376908	1376308	1383637	1383371
150	2123073	2123226	2098974	2125494	2126599	2123089	2123784	2102632	2126688	2126640
160	1376428	1376662	1366954	1383584	1383339	1376473	1376909	1376309	1383638	1383372
200	1376429	1376663	1366955	1383585	1383340	1376474	1376910	1376310	1383639	1383373
250	1376430	1376664	1366956	1383586	1383341	1376475	1376911	1376311	1383640	1383374
300	2123074	2123227	2098975	2125495	2126600	2123090	2123785	2102633	2126689	2126641
320	1376431	1376665	1366957	1383587	1383342	1376476	1376912	1376312	1383641	1383375
400	1376432	1376666	1366958	1383588	1383343	1376477	1376913	1376313	1383642	1383376
500	1376433	1376667	1366959	1383589	1383344	1376478	1376914	1376314	1383643	1383377

Accessories

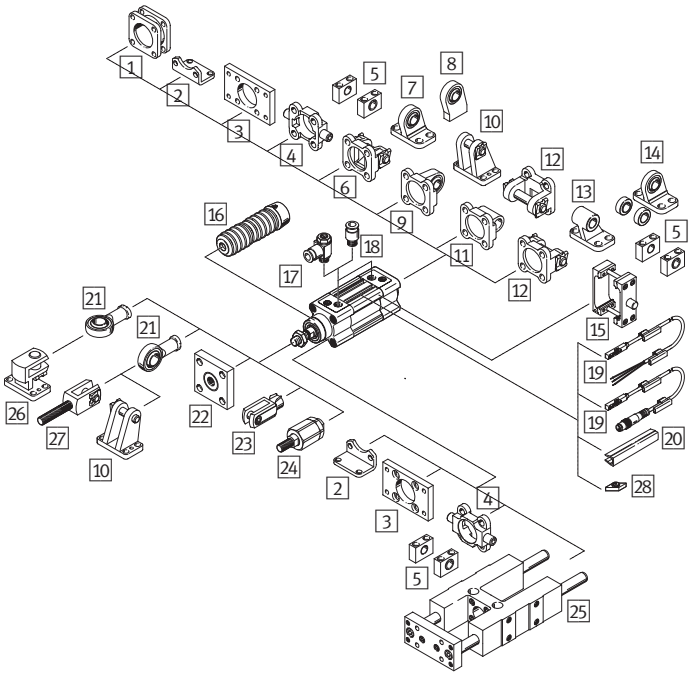

1 Multi-position kit DPNC ➔ 23
2 Foot mounting HNC ➔ 23
3 Flange mounting FNC ➔ 23
4 Trunnion flange ZNCF ➔ 23
5 Trunnion support LNZG ➔ 23
6 Swivel flange SNC ➔ 23
7 Clevis foot LSNG ➔ lsng
8 Clevis foot LSNSG ➔ lsnsg
9 Swivel flange SNCS ➔ 23
10 Clevis foot LBG ➔ lbg
11 Swivel flange SNCL ➔ 23
12 Swivel flange SNCB ➔ 23
13 Clevis foot LNG ➔ 23
14 Clevis foot LSN ➔ lsn
15 Trunnion mounting kit DAMT ➔ 23
16 Bellows kit DADB ➔ dadb
17 One-way flow control valve GRLA ➔ 147
18 Push-in fitting QS ➔ 212
19 Proximity sensor SME-/SMT-8M ➔ 166
20 Slot cover ABP-5-S ➔ abp-5
21 Rod eye SGS ➔ 48
22 Coupling piece KSG/KSZ ➔ ksg
23 Rod clevis SG ➔ 48
24 Self-aligning rod coupler FK ➔ 48
25 Guide unit FENG ➔ feng
26 Clevis foot LQG ➔ 23
27 Rod clevis SGA ➔ 23
28 Slot nut ABAN ➔ aban

FESTO

Accessories

1 Multi-position kit DPNC

For dia.	Type	Part no.
32	DPNC-32	174418
40	DPNC-40	174419
50	DPNC-50	174420
63	DPNC-63	174421
80	DPNC-80	174422

2 Foot mounting HNC/CRHNC[1)]

For dia.	Type	Part no.	Type	Part no.
32	HNC-32	174369	CRHNC-32	176937
40	HNC-40	174370	CRHNC-40	176938
50	HNC-50	174371	CRHNC-50	176939
63	HNC-63	174372	CRHNC-63	176940
80	HNC-80	174373	CRHNC-80	176941

1) CRHNC: High corrosion protection

3 Flange mounting FNC/CRFNC[2)]

For dia.	Type	Part no.	Type	Part no.
32	FNC-32	174376	CRFNG-32	161846
40	FNC-40	174377	CRFNG-40	161847
50	FNC-50	174378	CRFNG-50	161848
63	FNC-63	174379	CRFNG-63	161849
80	FNC-80	174380	CRFNG-80	161850

2) CRFNG: High corrosion protection

4 Trunnion flange ZNCF

For dia.	Type	Part no.
32	ZNCF-32	174411
40	ZNCF-40	174412
50	ZNCF-50	174413
63	ZNCF-63	174414
80	ZNCF-80	174415

5 Trunnion support LNZG

For dia.	Type	Part no.
32	LNZG-32	32959
40	LNZG-40/50	32960
50	LNZG-40/50	32960
63	LNZG-63/80	32961
80	LNZG-63/80	32961

6 Swivel flange SNC

For dia.	Type	Part no.
50	SNC-50	174385
80	SNC-80	174387

9 Swivel flange SNCS

For dia.	Type	Part no.
32	SNCS-32	174397
40	SNCS-40	174398
50	SNCS-50	174399
63	SNCS-63	174400
80	SNCS-80	174401

11 Swivel flange SNCL

For dia.	Type	Part no.
32	SNCL-32	174404
40	SNCL-40	174405
50	SNCL-50	174406
63	SNCL-63	174407
80	SNCL-80	174408

12 Swivel flange SNCB/SNCB-R3[3)]

For dia.	Type	Part no.	Type	Part no.
32	SNCB-32	174390	SNCB-32-R3	176944
40	SNCB-40	174391	SNCB-40-R3	176945
50	SNCB-50	174392	SNCB-50-R3	176946
63	SNCB-63	174393	SNCB-63-R3	176947
80	SNCB-80	174394	SNCB-80-R3	176948

3) SNCB-R3: High corrosion protection

13 Clevis foot LNG

For dia.	Type	Part no.
32	LNG-32	33890
40	LNG-40	33891
50	LNG-50	33892
63	LNG-63	33893
80	LNG-80	33894

15 Trunnion mounting kit DAMT

For dia.	Type	Part no.
32	DAMT-V1-32-A	2213233
40	DAMT-V1-40-A	2214899
50	DAMT-V1-50-A	2214909
63	DAMT-V1-63-A	2214971
80	DAMT-V1-80-A	163529

26 Right-angle clevis foot LQG

For dia.	Type	Part no.
32	LQG-32	31768
40	LQG-40	31769
50	LQG-50	31770
63	LQG-63	31771
80	LQG-80	31772

27 Rod clevis SGA

For dia.	Type	Part no.
32	SGA-M10x1,25	32954
40	SGA-M12x1,25	10767
50	SGA-M16x1,5	10768
63	SGA-M16x1,5	10768
80	SGA-M20x1,5	10769

Standards-based cylinders DSBG, to ISO 15552, double-acting

FESTO

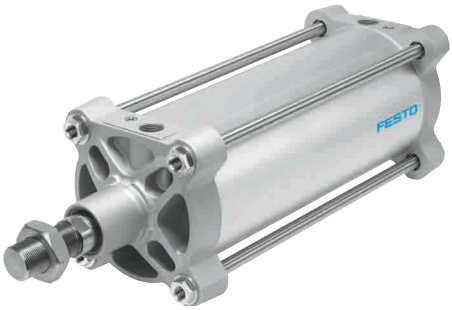

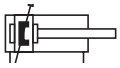

- Strokes of up to 2700 mm
- Excellent flexibility thanks to wide range of variants
- Extensive range of accessories makes it possible to install the cylinder virtually anywhere
- Selected types in accordance with ATEX directive for potentially explosive atmospheres
  → **www.festo.com/en/ex**

Order code

001	002	003	004	005	006	007	008	009	010	011	012	013
DSBG	–	–	–	–	PPV	O	N3	–	–	–	–	–

Legend: Mandatory entry; Optional entry

001	Type
DSBG	Double-acting standards-based cylinder

002	Central swivel mounting
–	Without protection against rotation

003	Piston diameter [mm]
...	160, 200, 250, 320

004	Stroke [mm]
...	1 ... 2700

005	Piston rod type
–	At one end

006	Cushioning
PPV	Pneumatic cushioning, adjustable at both ends

007	Position sensing
O	Via proximity sensor

008	Standard
N3	Conforms to ISO 15552

009	Temperature range
–	Standard

010	Trunnion flange mounting position
–	Without
...Y	Positive-locking screw connection 198 ... 2483 mm

011	Piston rod extension
–	Without
...E	1 ... 500 mm

012	Piston rod thread
–	Standard

013	Integrated stud bolts
–	Without

Product options

32 ... 125 mm Piston diameter

Q	With protection against rotation
L	Running characteristic low friction
U	Uniformly slow movement
L1	Low friction for balancer applications
V	Clamped central swivel mounting
F	Female piston rod thread
T	Through piston rod
P	Elastic cushioning rings/pads at both ends
PPS	Pneumatic cushioning, self-adjusting at both ends
R3	High corrosion protection
T1	Heat-resistant up to max. 120 °C
T3	Low temperature
T4	Heat-resistant up to max. 150 °C
P2	Bellows on bearing cap
A2	Hard wiper seal
A3	Suitable for unlubricated operation
A6	Metal wiper seal
EX4	EU certification (II 2GD)
...V	Swivel mounting position
...L	Piston rod thread extension
M36	Piston rod thread M36
M42	Piston rod thread M42
M48	Piston rod thread M48
B1	Integrated stud bolts at both ends
B2	Integrated stud bolts on bearing cap
B3	Integrated stud bolts on end cap

Ordering – Product options

Configurable product

This product and all its product options can be ordered using the configurator.

The configurator can be found under Products at
→ **www.festo.com/catalogue/...**

Enter the type or the configuration part number in the search field.

Configuration part no.

003 Piston dia. [mm]	Type	Part no.
160	DSBG-160-...-PPVA-N3	2035926
200	DSBG-200-...-PPVA-N3	2389803
250	DSBG-250-...-PPVA-N3	2865078
320	DSBG-320-...-PPVA-N3	3150987

FESTO

Accessories

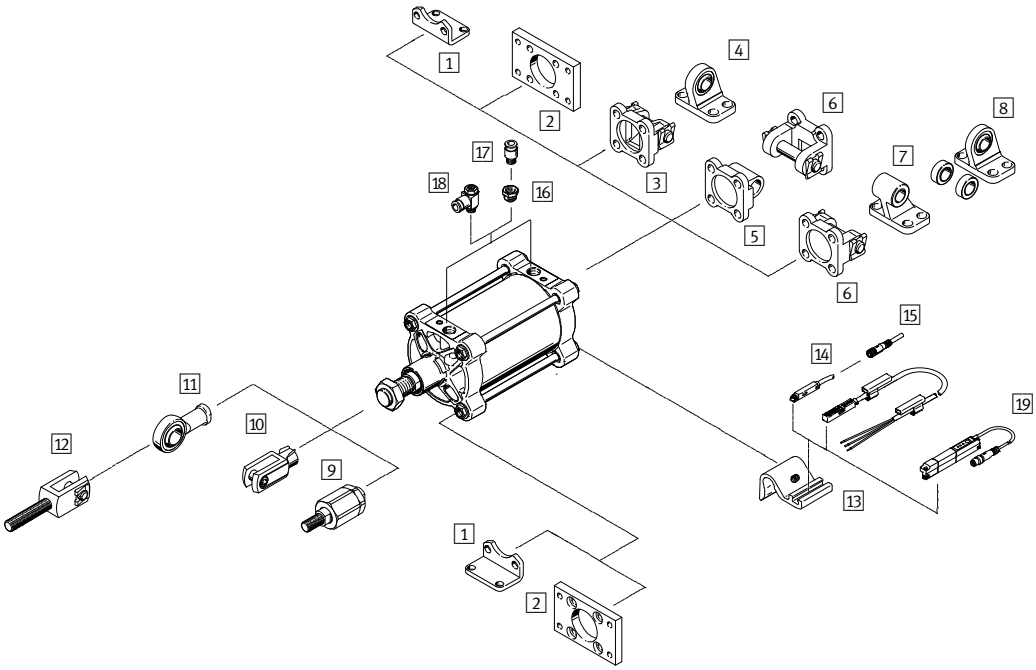

1 Foot mounting HNG ➔ 25
2 Flange mounting FNG ➔ 25
3 Swivel flange SNG ➔ 25
4 Clevis foot LSNG ➔ lsng
5 Swivel flange SNGL ➔ 25
6 Swivel flange SNGB ➔ 20
7 Clevis foot LN/LNG ➔ 25
8 Clevis foot LSN ➔ 25
9 Self-aligning rod coupler FK ➔ 25
10 Rod clevis SG ➔ 25
11 Rod eye SGS ➔ 25
12 Rod clevis SGA ➔ 25
13 Sensor bracket DASP ➔ 25
14 Proximity sensor SME/SMT-8M ➔ 166
15 Connecting cable NEBU ➔ 25
16 Reducing nipple NPFC ➔ npfc
Reducing nipple D ➔ dsbg
17 Push-in fitting QS ➔ 212
18 One-way flow control valve GRLA ➔ 147
19 Position transmitter SMAT-8M/SDAT ➔ dsbg

Trunnion support LNZG ➔ 25

1 Foot mounting HNG

For dia.	Type	Part no.
160	HNG-160	34476
200	HNG-200	34477
250	HNG-250	157510
320	HNG-320	157511

2 Flange mounting FNG

For dia.	Type	Part no.
160	FNG-160	34478
200	FNG-200	34479
250	FNG-250	157508
320	FNG-320	157509

3 Swivel flange SNG

For dia.	Type	Part no.
160	SNG-160	152597
200	SNG-200	152598

5 Swivel flange SNGL

For dia.	Type	Part no.
160	SNGL-160	151534
200	SNGL-200	151535

6 Swivel flange SNGB

For dia.	Type	Part no.
160	SNGB-160	34547
200	SNGB-200-B	562455
250	SNGB-250	157512
320	SNGB-320	157513

7 Clevis foot LN

For dia.	Type	Part no.
160	LN-160	9037
200	LNG-200	33898
250	LN-250	9039
320	LN-320	9040

8 Clevis foot LSN

For dia.	Type	Part no.
160	LSN-160	6988
200	LSN-200	6989
250	LSN-250	6990
320	LSN-320	6991

9 Self-aligning rod coupler FK

For dia.	Type	Part no.
160, 200	FK-M36X2	10746

10 Rod clevis SG

For dia.	Type	Part no.
160, 200	SG-M36X2	9581

11 Rod eye SGS

For dia.	Type	Part no.
160, 200	SGS-M36x2	10775

12 Rod clevis SGA

For dia.	Type	Part no.
160, 200	SGA-M36X2	10771

13 Sensor bracket DASP

For dia.	Type	Part no.
160, 200	DASP-M4-160-A	1553813

Trunnion support LNZG

For dia.	Type	Part no.
160, 200	LNZG-160/200	35780
250	LNZG-250	157516
320	LNZG-320	157517

15 Connecting cable NEBU

For size	Description	Type	Part no.
M8x1, 3-pin, with cable			
160 … 320	Straight socket, 2.5 m	NEBU-M8G3-K-2.5-LE3	541333
	Straight socket, 5 m	NEBU-M8G3-K-5-LE3	541334
160 … 320	Angled socket, 2.5 m	NEBU-M8W3-K-2.5-LE3	541338
	Angled socket, 5 m	NEBU-M8W3-K-5-LE3	541341
M12x1, 5-pin, with cable			
160 … 320	Straight socket, 2.5 m	NEBU-M12G5-K-2.5-LE3	541363
	Straight socket, 5 m	NEBU-M12G5-K-5-LE3	541364
160 … 320	Angled socket, 2.5 m	NEBU-M12W5-K-2.5-LE3	541367
	Angled socket, 5 m	NEBU-M12W5-K-5-LE3	541370

Standards-based cylinders DSBF-C, to ISO 15552, Clean Design

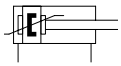

- Strokes of up to 2800 mm
- Standards-based cylinder with increased corrosion protection
- Resistant to conventional cleaning agents
- Long service life thanks to optional dry-running seal
- Comprehensive range of mounting accessories for just about every type of installation
- Selected types in accordance with ATEX directive for potentially explosive atmospheres
  ➔ **www.festo.com/en/ex**

Order code

001	002	003	004	005	006	007	008	009	010	011	012	013	014	015
DSBF	C						PPS	O	N3					R

Legend: Mandatory entry; Optional entry

001	Type
DSBF	Double-acting standards-based cylinder

002	Version
C	Easy-to-clean design

003	Running characteristic
–	Standard

004	Piston diameter [mm]
...	32, 40, 50, 63, 80, 100, 125

005	Stroke [mm]
...	25, 40, 50, 80, 100, 125, 160, 200, 250, 320, 400, 500, 1 ... 2800

006	Piston rod type
–	At one end

007	Piston rod thread type
–	Male thread

008	Cushioning
PPS	Pneumatic cushioning, self-adjusting at both ends

009	Position sensing
O	Via proximity sensor

010	Standard
N3	Conforms to ISO 15552

011	Temperature range
–	Standard

012	Wiper seal variant
–	Standard

013	Piston rod extension
–	None

014	Piston rod thread extension
–	None

015	Sensor mounting, external
R	Mounting rail for sensors

Product options

L	Running characteristic low friction
U	Uniformly slow movement
T	Through piston rod
F	Female piston rod thread
P	Elastic cushioning rings/pads at both ends
PPV	Pneumatic cushioning, adjustable at both ends
T1	Heat-resistant seals up to max. 120 °C
T3	Low temperature
T4	Heat-resistant seals up to max. 150 °C
A1	Increased chemical resistance
A2	Hard wiper seal
A3	Suitable for unlubricated operation
EX4	EU certification (II 2GD)

Ordering – Product options

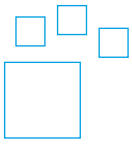

Configurable product

This product and all its product options can be ordered using the configurator.

The configurator can be found under Products at
➔ **www.festo.com/catalogue/...**

Enter the type or the configuration part number in the search field.

Configuration part no.

004 Piston dia. [mm]	Type	Part no.
32	DSBF-C-32-...-PPSA-N3-R	1778516
40	DSBF-C-40-...-PPSA-N3-R	1779309
50	DSBF-C-50-...-PPSA-N3-R	1779742
63	DSBF-C-63-...-PPSA-N3-R	1780600

004 Piston dia. [mm]	Type	Part no.
80	DSBF-C-80-...-PPSA-N3-R	1780945
100	DSBF-C-100-...-PPSA-N3-R	1781567
125	DSBF-C-125-...-PPSA-N3-R	1792703

FESTO

Accessories

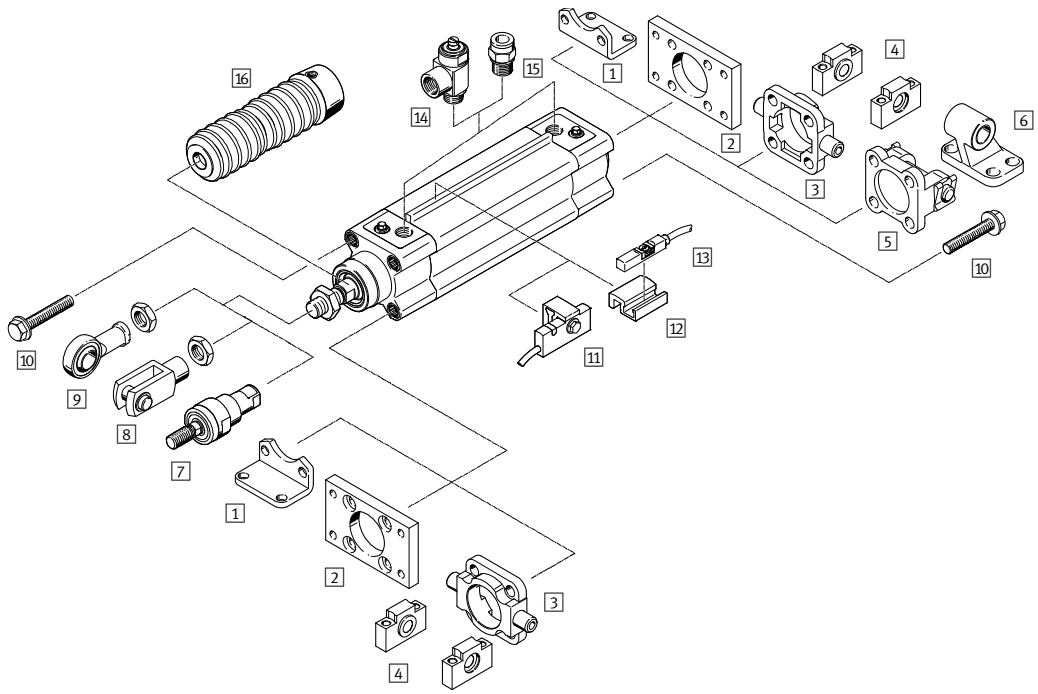

1 Foot mounting CRHNC ➔ 27
2 Flange mounting CRFNG ➔ 27
3 Trunnion flange CRZNG ➔ 27
4 Trunnion support CRLNZG ➔ 27
5 Swivel flange SNCB- … -R3 ➔ 27
6 Clevis foot CRLNG ➔ 27
7 Self-aligning rod coupler CRFK ➔ 27
8 Rod clevis CRSG ➔ 27
9 Rod eye CRSGS ➔ 27
10 Blanking screw DAMD ➔ damd
11 Proximity sensor SMT-C1 ➔ smt
12 Mounting kit SMB-8-C ➔ dsbf
13 Proximity sensor CRSMT-8M ➔ crsmt-8 m
14 One-way flow control valve CRGRLA ➔ crgrla
15 Push-in fitting NPQH/CRQS/CRQSL ➔ 208
16 Bellows kit DADB ➔ dsbf

1 Foot mounting CRHNC

For dia.	Type	Part no.
32	CRHNC-32	176937
40	CRHNC-40	176938
50	CRHNC-50	176939
63	CRHNC-63	176940
80	CRHNC-80	176941
100	CRHNC-100	176942
125	CRHNC-125	176943

4 Trunnion support CRLNZG

For dia.	Type	Part no.
32	CRLNZG-32	161874
40	CRLNZG-40/50	161875
50		
63	CRLNZG-63/80	161876
80		
100	CRLNZG-100/125	161877
125		

6 Clevis foot CRLNG

For dia.	Type	Part no.
32	CRLNG-32	161840
40	CRLNG-40	161841
50	CRLNG-50	161842
63	CRLNG-63	161843
80	CRLNG-80	161844
100	CRLNG-100	161845
125	CRLNG-125	176951

8 Rod clevis CRSG

For dia.	Type	Part no.
32	CRSG-M10x1,25	13569
40	CRSG-M12x1,25	13570
50	CRSG-M16x1,5	13571
63		
80	CRSG-M20x1,5	13572
100		
125	CRSG-M27x2	185361

2 Flange mounting CRFNG

For dia.	Type	Part no.
32	CRFNG-32	161846
40	CRFNG-40	161847
50	CRFNG-50	161848
63	CRFNG-63	161849
80	CRFNG-80	161850
100	CRFNG-100	161851
125	CRFNG-125	185363

5 Swivel flange SNCB

For dia.	Type	Part no.
32	SNCB-32-R3	176944
40	SNCB-40-R3	176945
50	SNCB-50-R3	176946
63	SNCB-63-R3	176947
80	SNCB-80-R3	176948
100	SNCB-100-R3	176949
125	SNCB-125-R3	176950

7 Self-aligning rod coupler CRFK

For dia.	Type	Part no.
32	CRFK-M10x1,25	2305778
40	CRFK-M12x1,25	2305779
50	CRFK-M16x1,5	2490673
63		
80	CRFK-M20x1,5	2545677
100		

9 Rod eye CRSGS

For dia.	Type	Part no.
32	CRSGS-M10x1,25	195582
40	CRSGS-M12x1,25	195583
50	CRSGS-M16x1,5	195584
63		
80	CRSGS-M20x1,5	195585
100		
125	CRSGS-M27x2	195586

3 Trunnion flange CRZNG

For dia.	Type	Part no.
32	CRZNG-32	161852
40	CRZNG-40	161853
50	CRZNG-50	161854
63	CRZNG-63	161855
80	CRZNG-80	161856
100	CRZNG-100	161857
125	CRZNG-125	185362

Round cylinders DSNU, to ISO 6432, double-acting

FESTO

1

DSNU

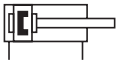

- Diameter 8 … 25 mm: ISO 6432
- For the highest requirements for running characteristics, service life and load carrying ability
- Universal use thanks to individual variants
- Comprehensive range of accessories
- Selected types in accordance with ATEX directive for potentially explosive atmospheres
  ➔ **www.festo.com/en/ex**

Order code – Basic design

001	002	003	004	005
DSNU	–	–	–	–

Legend: Mandatory entry; Optional entry

001	Type
DSNU	Double-acting standards-based cylinder

002	Piston diameter [mm]
…	12, 16, 20, 25

003	Stroke [mm]
…	10, 15, 20, 25, 30, 35, 40, 50, 60, 70, 80, 100, 125, 150, 160, 200, 250, 300, 320

004	Cushioning
P	Elastic cushioning rings/pads at both ends
PPV	Pneumatic cushioning, adjustable at both ends
PPS	Pneumatic cushioning, self-adjusting at both ends

005	Position sensing
–	Without
O	Via proximity sensor

Product options

8 … 63 mm Piston diameter
1 … 500 mm Variable stroke
MQ Alternative plain cylinder end cap, lateral connection
MA Alternative plain cylinder end cap, axial connection
MH Alternative cylinder end cap, direct mounting
Q With protection against rotation
S2 Through piston rod
KP With clamping unit
K8 Extended piston rod
S6 Heat-resistant seals up to max. 120 °C
K2 Extended male piston rod thread
K3 Female piston rod thread
K5 Special piston rod thread
K6 Shortened male piston rod thread
S10 Slow speed
S11 Low friction
R3 High corrosion protection
R8 Wiper seal

Ordering – Product options

Configurable product

This product and all its product options can be ordered using the configurator.

The configurator can be found under Products at
➔ **www.festo.com/catalogue/...**

Enter the type or the configuration part number in the search field.

Configuration part no.

002 Piston dia. [mm]	Type	Part no.
8	DSNU-8-...	193986
10	DSNU-10-...	193987
12	DSNU-10-...	193988
16	DSNU-16-...	193989
20	DSNU-20-...	193990

002 Piston dia. [mm]	Type	Part no.
25	DSNU-25-...	193991
32	DSNU-32-...	193992
40	DSNU-40-...	193993
50	DSNU-50-...	193994
63	DSNU-63-...	193995

FESTO

Ordering – Basic design

003 **Stroke [mm]**	002 Piston dia. **[mm]**				002 Piston dia. **[mm]**			002 Piston dia. **[mm]**		
	12	16	20	25	16	20	25	16	20	25
	004 **Cushioning** – 005 **Position sensing**				004 **Cushioning** – 005 **Position sensing**			004 **Cushioning** – 005 **Position sensing**		
	P – A	P – A	P – A	P – A	PPV – A	PPV – A	PPV – A	PPS – A	PPS – A	PPS – A
10	19189	19198	19207	19218	1908266	1908289	1908312	1908274	1908297	1908320
15	1908255	1908259	1908282	1908305	1908267	1908290	1908313	1908275	1908298	1908321
20	1908256	1908260	1908283	1908306	1908268	1908291	1908314	1908276	1908299	1908322
25	19190	19199	19208	19219	33973	33974	33975	559263	559271	559282
30	1908257	1908261	1908284	1908307	1908269	1908292	1908315	1908277	1908300	1908323
35		1908262	1908285	1908308	1908270	1908293	1908316	1908278	1908301	1908324
40	19191	19200	19209	19220	19229	19236	19245	559264	559272	559283
50	19192	19201	19210	19221	19230	19237	19246	559265	559273	559284
60	1908258	1908263	1908286	1908309	1908271	1908294	1908317	1908279	1908302	1908325
70		1908264	1908287	1908310	1908272	1908295	1908318	1908280	1908303	1908326
80	19193	19202	19211	19222	19231	19238	19247	559266	559274	559285
100	19194	19203	19212	19223	19232	19239	19248	559267	559275	559286
125	19195	19204	19213	19224	19233	19240	19249	559268	559276	559287
150		1908265	1908288	1908311	1908273	1908296	1908319	1908281	1908304	1908327
160	19196	19205	19214	19225	19234	19241	19250	559269	559277	559288
200	19197	19206	19215	19226	19235	19242	19251	559270	559278	559289
250			19216	19227		19243	19252		559279	559290
300			19217	19228		19244	19253		559280	559291
320			34718	34719		34720	34721		559281	559292

Accessories

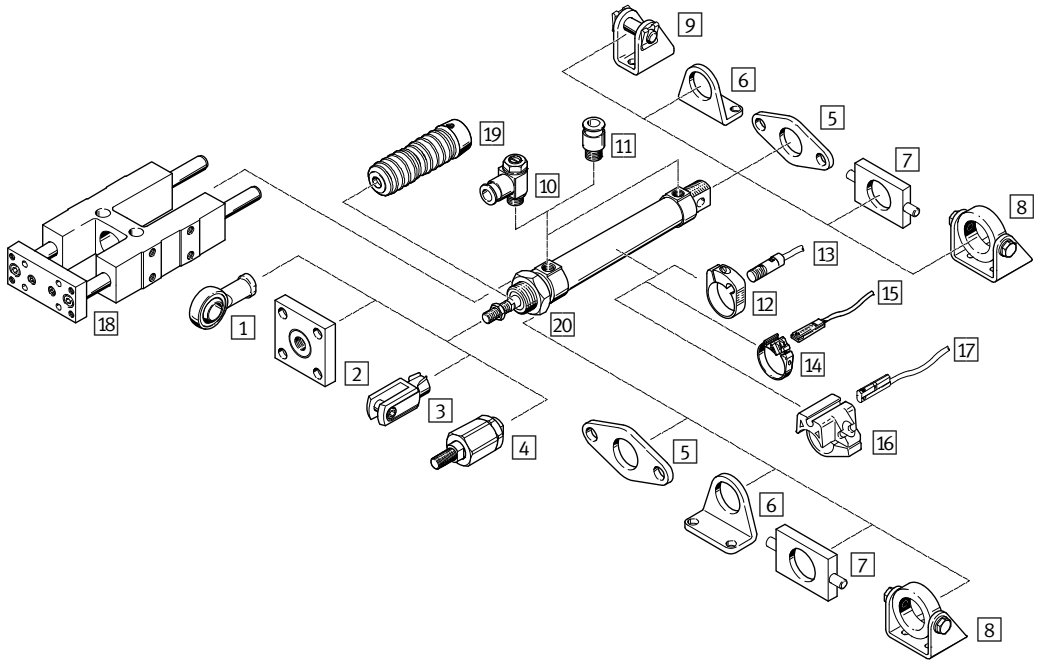

1 Rod eye SGS ➔ 48
2 Coupling piece KSG/KSZ ➔ ksg
3 Rod clevis SG ➔ 48
4 Self-aligning rod coupler FK ➔ 48
5 Flange mounting FBN ➔ 29
6 Foot mounting HBN ➔ 29
7 Swivel mounting WBN ➔ 29
8 Swivel mounting SBN ➔ 29
9 Clevis foot LBN ➔ 29
10 One-way flow control valve GRLA/GRLZ ➔ 147
11 Push-in fitting QS ➔ 212
12 Mounting kit SMBR ➔ smbr
13 Proximity sensor SMEO-/ SMTO-4U ➔ smeo-4u
14 Mounting kit SMBR-8 ➔ 167
15 Proximity sensor SME-/SMT-8M ➔ 166
16 Mounting kit SMBR-10 ➔ smbr-10
17 Proximity sensor SME-/ SMT-10 ➔ sme-10
18 Guide unit FEN ➔ fen
19 Bellows kit DADB ➔ dadb
20 Hex nut MSK ➔ msk

5 Flange mounting FBN

For dia.	Type	Part no.
12, 16	FBN-12/16	5130
20, 25	FBN-20/25	5131

6 Foot mounting HBN

For dia.	Type	Part no.
12, 16	HBN-12/16X1	5125
	HBN-12/16X2	5126
20, 25	HBN-20/25X1	5127
	HBN-20/25X2	5128

7 Swivel mounting WBN

For dia.	Type	Part no.
12, 16	WBN-12/16	8609
20, 25	WBN-20/25	8610

8 Swivel mounting SBN

For dia.	Type	Part no.
20, 25	SBN-20/25	539927

9 Clevis foot LBN

For dia.	Type	Part no.
12, 16	LBN-12/16	6058
20, 25	LBN-20/25	6059

Round cylinders CRDSNU, stainless steel

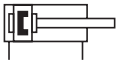

- Diameter 25 mm: ISO 6432
- With self-adjusting pneumatic end-position cushioning PPS
- Easy-to-clean design
- High corrosion protection
- Selected types in accordance with ATEX directive for potentially explosive atmospheres
  ➔ **www.festo.com/en/ex**

Order code – Basic design

001	002	003	004	005	006	007	008
CRDSNU	B			PPS	A	MG	A1

Legend: Mandatory entry

001	Type
CRDSNU	Double-acting standards-based cylinder, stainless steel

002	Version
B	Stock items

003	Piston diameter [mm]
...	25, 32

004	Stroke [mm]
...	10, 25, 40, 50, 80, 100, 125, 160, 200

005	Cushioning
PPS	Pneumatic cushioning, self-adjusting at both ends

006	Position sensing
A	Via proximity sensor

007	Cylinder end cap
MG	Bearing cap without mounting thread

008	Wiper seal material
A1	Heat and acid-resistant

Product options

8 ... 63 mm Piston diameter
1 ... 500 mm Variable stroke
P elastic cushioning rings/plates at both ends
PPV Pneumatic cushioning, adjustable at both ends
MQ Alternative plain cylinder end cap, lateral connection
A2 Hard scraper
A3 Unlubricated operation
S2 Through piston rod
S6 Heat-resistant seals up to max. 120 °C
K2 Extended male piston rod thread
K3 Piston rod with female thread
K5 Piston rod with special thread
K8 Extended piston rod
TT Low temperature –40 ... +80 °C

Ordering – Product options

Configurable product

This product and all its product options can be ordered using the configurator.

The configurator can be found under Products at
➔ **www.festo.com/catalogue/...**

Enter the type or the configuration part number in the search field.

FESTO

Ordering – Basic design

Round cylinders, ISO 6432		
003 Piston diameter [mm]	25	
004 Stroke [mm]	Type	Part no.
10	CRDSNU-B-25-10-PPS-A-MG-A1	2159636
25	CRDSNU-B-25-25-PPS-A-MG-A1	2159637
40	CRDSNU-B-25-40-PPS-A-MG-A1	2159638
50	CRDSNU-B-25-50-PPS-A-MG-A1	2159639
80	CRDSNU-B-25-80-PPS-A-MG-A1	2159640
100	CRDSNU-B-25-100-PPS-A-MG-A1	2159641
125	CRDSNU-B-25-125-PPS-A-MG-A1	2159642
160	CRDSNU-B-25-160-PPS-A-MG-A1	2159643
200	CRDSNU-B-25-200-PPS-A-MG-A1	2159644

Round cylinders		
003 Piston diameter [mm]	32	
004 Stroke [mm]	Type	Part no.
10	CRDSNU-B-32-10-PPS-A-MG-A1	2176399
25	CRDSNU-B-32-25-PPS-A-MG-A1	2176400
40	CRDSNU-B-32-40-PPS-A-MG-A1	2176401
50	CRDSNU-B-32-50-PPS-A-MG-A1	2176402
80	CRDSNU-B-32-80-PPS-A-MG-A1	2176403
100	CRDSNU-B-32-100-PPS-A-MG-A1	2176404
125	CRDSNU-B-32-125-PPS-A-MG-A1	2176405
160	CRDSNU-B-32-160-PPS-A-MG-A1	2176406
200	CRDSNU-B-32-200-PPS-A-MG-A1	2176407

Accessories

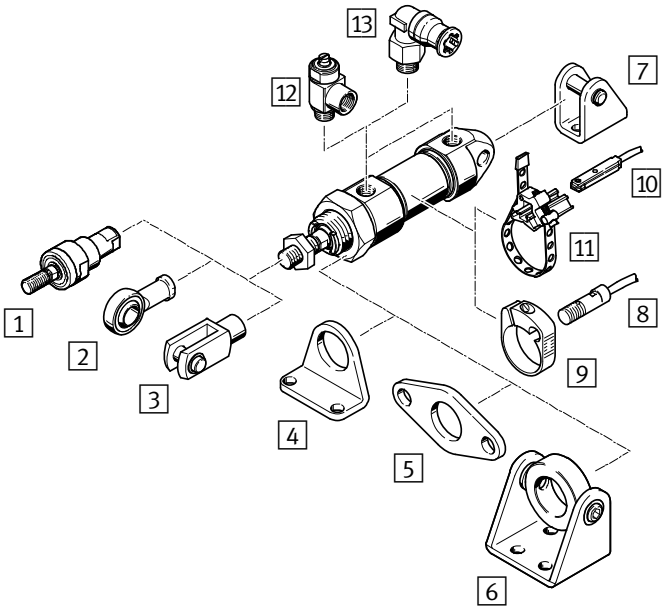

1 Self-aligning rod coupler CRFK ➔ crfk
2 Rod eye CRSGS ➔ crsgs
3 Rod clevis CRSG ➔ crsg
4 Foot mounting CRHBN ➔ crhbn
5 Flange mounting CRFBN ➔ crfbn
6 Swivel mounting CRSBN ➔ crsbn
7 Clevis foot CRLBN ➔ crlbn
8 Proximity sensor CRSMEO-4 ➔ 31
9 Mounting kit CRSMBR ➔ 31
10 Proximity sensor CRSMT-8 ➔ crsmt
11 Mounting kit SMBR ➔ smbr
12 One-way flow control valve CRGRLA ➔ crgrla
13 Push-in fitting CRQS ➔ crqs

8 **Proximity sensor, corrosion-resistant**	
Type	Part no.
Kabellänge 2,5 m, Schließer, 3-adrig	
CRSMEO-4-K-LED-24	161775

9 **Mounting kit, corrosion-resistant**		
For ∅	Type	Part no.
12	CRSMBR-12	164581
16	CRSMBR-16	164582
20	CRSMBR-20	164583
25	CRSMBR-25	164584
32	CRSMBR-32	163888
40	CRSMBR-40	163889
50	CRSMBR-50	163890
63	CRSMBR-63	163891

Short-stroke cylinders ADVC, AEVC, double-acting/single-acting

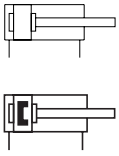

- High clamping forces in a compact size
- Mounting hole pattern to ISO 15552 from diameter 32 mm
- Application-oriented housing and piston rod variants
- Supply ports and profile slot for proximity sensors on one side

Order code – Basic design

001	002	003	004	005	006
				P	

Legend: Mandatory entry; Optional entry

001	Type
ADVC	Double-acting short-stroke cylinder
AEVC	Single-acting short-stroke cylinder

002	Piston diameter [mm]
...	12, 16, 20, 25, 32, 40, 50, 63

003	Stroke [mm]
...	5, 10, 15, 20, 25

004	Piston rod thread
O	Male thread
I	Female thread

005	Cushioning
P	Elastic cushioning rings/pads at both ends

006	Position sensing
–	Without position sensing
C	Via proximity sensor

Product options

4 ... 100 mm Piston diameter
– Without piston rod thread

Ordering – Product options

Configurable product

This product and all its product options can be ordered using the configurator.

The configurator can be found under Products at
➔ **www.festo.com/catalogue/...**

Enter the type or the configuration part number in the search field.

FESTO

Ordering – Basic version ADVC, double-acting

003 Stroke [mm]	002 Piston dia. [mm] 12	16	20	25	32	40	50	63
	004 Piston rod thread – 005 Cushioning – 006 Without position sensing							
	A – P	A – P	A – P	A – P	A – P	A – P	A – P	A – P
5	188094	188123	188155	188187	188219	188247		
10	188095	188124	188156	188188	188220	188248	188272	188296
15		188125	188157	188189	188221	188249	188273	188297
20		188126	188158	188190	188222	188250	188274	188298
25		188127	188159	188191	188223	188251	188275	188299
	004 Piston rod thread – 005 Cushioning – 006 Without position sensing							
	I – P	I – P	I – P	I – P	I – P	I – P	I – P	I – P
5	188090	188113	188145	188177	188209	188237		
10	188091	188114	188146	188178	188210	188238	188264	188288
15		188115	188147	188179	188211	188239	188265	188289
20		188116	188148	188180	188212	188240	188266	188290
25		188117	188149	188181	188213	188241	188267	188291
	004 Piston rod thread – 005 Cushioning – 006 Position sensing via proximity sensor							
	A – P – A	A – P – A	A – P – A	A – P – A	A – P – A	A – P – A	A – P – A	A – P – A
5	188092	188118	188150	188182	188214	188242		
10	188093	188119	188151	188183	188215	188243	188268	188292
15		188120	188152	188184	188216	188244	188269	188293
20		188121	188153	188185	188217	188245	188270	188294
25		188122	188154	188186	188218	188246	188271	188295
	004 Piston rod thread – 005 Cushioning – 006 Position sensing via proximity sensor							
	I – P – A	I – P – A	I – P – A	I – P – A	I – P – A	I – P – A	I – P – A	I – P – A
5	188088	188108	188140	188172	188204	188232		
10	188089	188109	188141	188173	188205	188233	188260	188284
15		188110	188142	188174	188206	188234	188261	188285
20		188111	188143	188175	188207	188235	188262	188286
25		188112	188144	188176	188208	188236	188263	188287

Ordering – Basic version AEVC, single-acting

003 Stroke [mm]	002 Piston dia. [mm] 12	16	20	25	32	40	50	63
	004 Piston rod thread – 005 Cushioning – 006 Without position sensing							
	A – P	A – P	A – P	A – P	A – P	A – P	A – P	A – P
5	188086	188105	188137	188169	188201			
10	188087	188106	188138	188170	188202	188230	188258	188282
25		188107	188139	188171	188203	188231	188259	188283
	004 Piston rod thread – 005 Cushioning – 006 Without position sensing							
	I – P	I – P	I – P	I – P	I – P	I – P	I – P	I – P
5	188082	188099	188131	188163	188195			
10	188083	188100	188132	188164	188196	188226	188254	188278
25		188101	188133	188165	188197	188227	188255	188279

FESTO

Accessories (from piston diameter 32 mm)

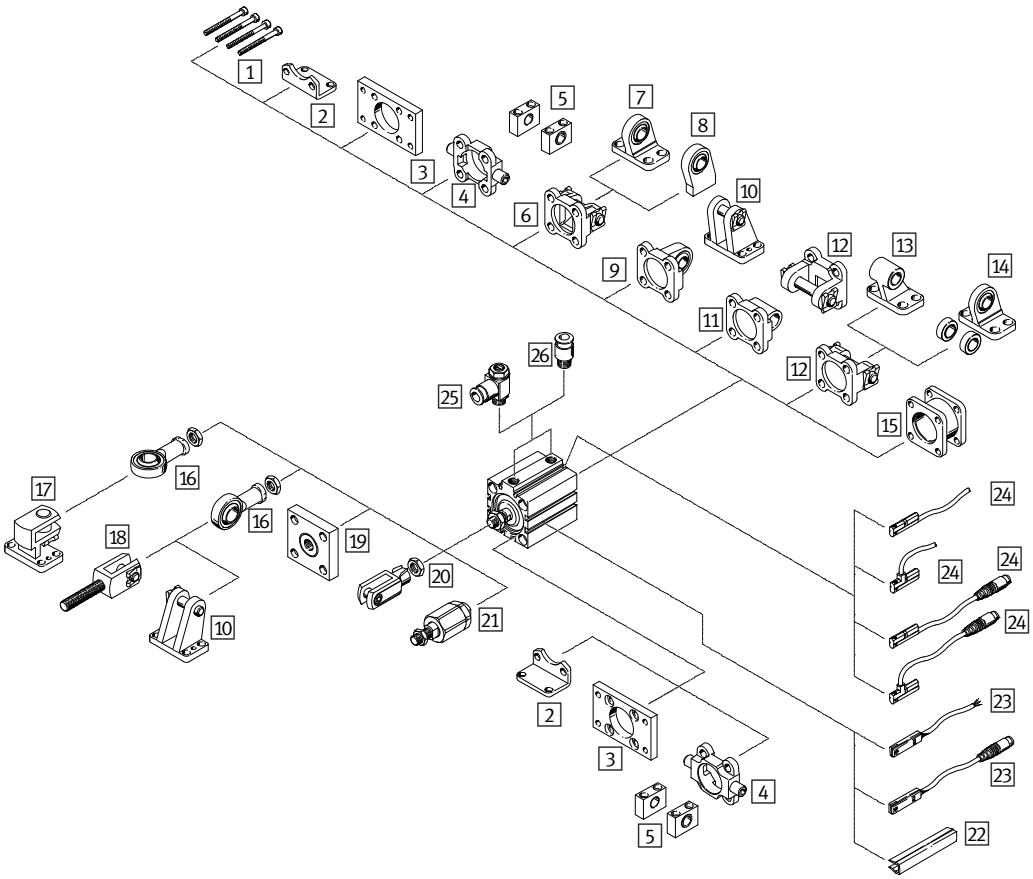

1 Mounting screws (not included in the scope of delivery)
2 Foot mounting HNC → 23
3 Flange mounting FNC → 23
4 Trunnion flange ZNCF → 23
5 Trunnion support LNZG → 23
6 Swivel flange SNC → 23
7 Clevis foot LSNG → lsng
8 Clevis foot LSNSG → lsnsg
9 Swivel flange SNCS → 23
10 Clevis foot LBG → lbg
11 Swivel flange SNCL → 23
12 Swivel flange SNCB → 23
13 Clevis foot LNG → 34
14 Clevis foot LSN → lsn
15 Multi-position kit DPNC → 23
16 Rod eye SGS → 48
17 Right-angle clevis foot LQG → 23
18 Rod clevis SGA → 34
19 Coupling piece KSG → ksg
20 Rod clevis SG → 48
21 Self-aligning rod coupler FK → 48
22 Slot cover ABP-5-S → abp-5
23 Proximity sensor SME-/SMT-8M → 166
24 Proximity sensor SME-/SMT-10M → 34
25 One-way flow control valve GRLA → 147
26 Push-in fitting QS → 212

13 Clevis foot LNG

For dia.	Type	Part no.
32	LNG-32	33890
40	LNG-40	33891
50	LNG-50	33892
63	LNG-63	33893

18 Rod clevis SGA

For dia.	Type	Part no.
32	SGA-M10x1,25	32954
40	SGA-M10x1,25	32954
50	SGA-M12x1,25	10767
63	SGA-M12x1,25	10767

24 Proximity sensor, magnetic reed

Description	Type	Part no.
Cable, 2.5 m, 3-wire	SME-10M-DS-24 V-E-2,5-L-OE	551365
Plug M8x1, 3-pin	SME-10M-DS-24 V-E-0,3-L-M8D	551367

24 Proximity sensor, magneto-resistive

Description	Type	Part no.
Cable, 2.5 m, 3-wire	SMT-10M-PS-24 V-E-2,5-L-OE	551373
Plug M8x1, 3-pin	SMT-10M-PS-24 V-E-0,3-L-M8D	551375

Linear drives DGC-K, double-acting

FESTO

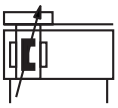

- Compact design: 30% smaller than the basic design DGC-G
- Low moving dead weight
- Without external guide, for simple drive functions
- Symmetrical design
- Easy assembly and installation

Order code

001	002	003	004	005	006	007	008	009	010	011	012
DGC	C			PPV	C						+ ZUB –

001	Type
DGC	Linear drive

002	Guide
C	Compact

003	Piston diameter [mm]
...	18, 25, 32, 40, 50, 63, 80

004	Stroke [mm]
...	1 ... 8500

005	Cushioning
PPV	Pneumatic cushioning, adjustable at both ends

006	Position sensing
O	Via proximity sensor

007	Basic design
GK	Standard piston
GV	Extended piston

008	Compressed air connection
–	At one end
D2	At both ends

009	Lubrication
–	Standard
H1	Lubrication approved for use in food applications

010	Moment compensator
–	Without
FK	Moment compensator

011	EU certification
–	Without
EX2	II 3GD in accordance with EU Directive 2014/34/EU
EX3	II 2G in accordance with EU Directive 2014/34/EU

012	Accessories
ZUB –	Accessories enclosed separately
F	Foot mounting (1 piece)
...M	Profile mounting (1 ... 10 pieces)
...Y	Slot nut (1 ... 10 pieces)
...B	Slot cover (1 ... 10 pieces)
...G	Proximity sensor, N/O contact with cable, 2.5 m (1 ... 10 pieces)
...H	Proximity sensor, N/O contact with plug (1 ... 10 pieces)
...I	Proximity sensor, N/O contact, contactless with cable, 2.5 m (1 ... 10 pieces)
...J	Proximity sensor, N/O contact, contactless with plug (1 ... 10 pieces)
...N	Proximity sensor, N/C contact with cable, 7.5 m (1 ... 10 pieces)
...V	Connecting cable with plug, 2.5 m (1 ... 10 pieces)
...S	Slot cover for sensor slot (1 ... 10 pieces)

Legend: Mandatory entry Optional entry

Ordering

Configurable product

This product and all its product options can be ordered using the configurator.

The configurator can be found under Products at
➔ **www.festo.com/catalogue/...**

Enter the type or the configuration part number in the search field.

Configuration part no.

003 Piston dia. [mm]	Type	Part no.
18	DGC-K-18-...-PPV-A-...	1312500
25	DGC-K-25-...-PPV-A-...	1312501
32	DGC-K-32-...-PPV-A-...	1312502
40	DGC-K-40-...-PPV-A-...	1312503

003 Piston dia. [mm]	Type	Part no.
50	DGC-K-50-...-PPV-A-...	1312504
63	DGC-K-63-...-PPV-A-...	1312505
80	DGC-K-80-...-PPV-A-...	1312506

FESTO

Accessories

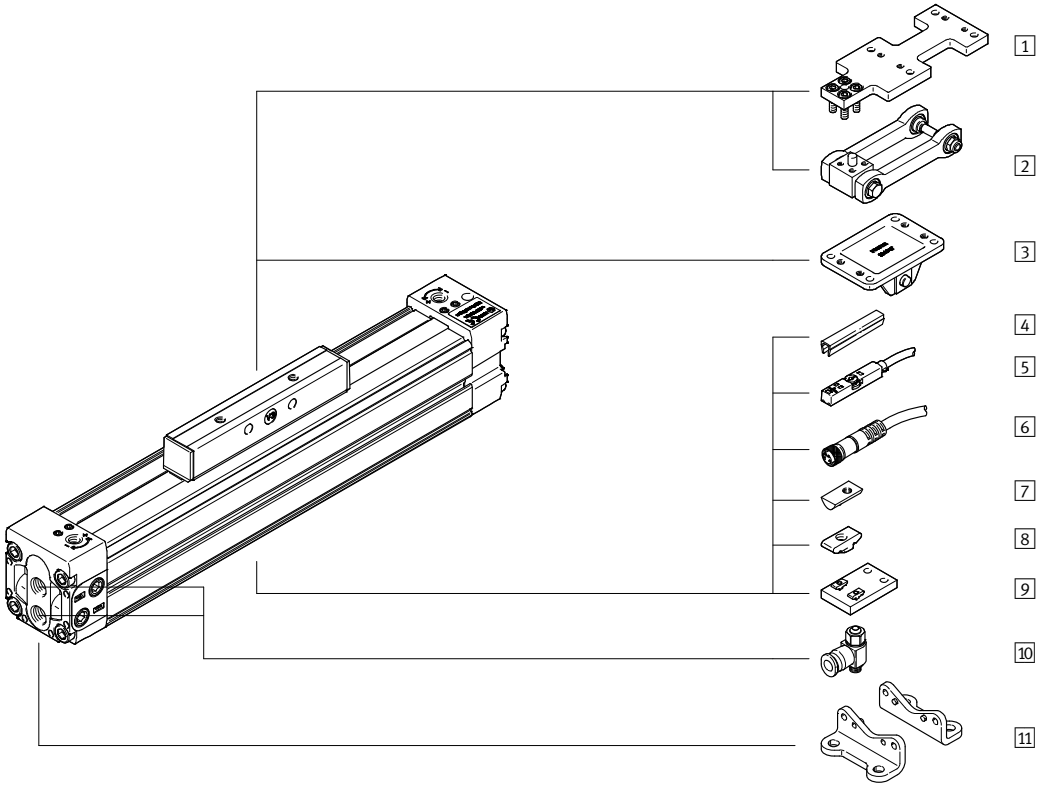

1 Adapter plate DAMF ➔ 36
2 Moment compensator DARD-...-M ➔ 36
3 Moment compensator DARD-...-S ➔ 36
4 Slot cover ABP ➔ 36
5 Proximity sensor SMT-8M/SME-8M ➔ 166
6 Connecting cable NEBU ➔ 36
7 Slot nut for mounting slot NST ➔ 36
8 Slot nut for mounting slot ABAN ➔ 36
9 Central support MUP ➔ 36
10 One-way flow control valve GRLA ➔ 147
11 Foot mounting HP ➔ 36

1 Adapter plate DAFM

For dia.	Type	Part no.
18	DAMF-18-FKP	2349281
25	DAMF-25-FKP	2349282
32	DAMF-32-FKP	2349283
40	DAMF-40-FKP	2349284
50	DAMF-50-FKP	2349285
63	DAMF-63-FKP	2349286
80	DAMF-80-FKP	2349287

2 Moment compensator DARD-...-M

For dia.	Type	Part no.
18	DARD-L1-18-M	2349274
25	DARD-L1-25-M	2349275
32	DARD-L1-32-M	2349276
40	DARD-L1-40-M	2349277
50	DARD-L1-50-M	2349278
63	DARD-L1-63-M	2349279
80	DARD-L1-80-M	2349280

3 Moment compensator DARD-...-S

For dia.	Type	Part no.
18	DARD-L1-18-S	8001411
25	DARD-L1-32-S	8001412
32	DARD-L1-32-S	8001412
40	DARD-L1-40-S	8001413
50	DARD-L1-63-S	8001414
63	DARD-L1-63-S	8001414
80	DARD-L1-80-S	8001415

4 Slot cover ABP[1)]

For dia.	Type	Part no.
32	ABP-5	151681
40		
50	ABP-8	151682
63		

1) Packaging unit 2x 0.5 m.

7 Slot nut NST

For dia.	Type	Part no.
18	NST-HMV-M4[2),3)]	526091
25		
32	NST-5-M5	150914
40		
50	NST-8-M6	150915
63		
80		

2) Packaging unit 10 pieces.
3) Piston size 18 and 25 cannot be used with DGC-...-D2 (supply port at both ends).

8 Slot nut ABAN

For dia.	Type	Part no.
18	ABAN-1M4-5[4)]	8003032
25		

4) Packaging unit 4 pieces.

9 Central support MUP

For dia.	Type	Part no.
18	MUP-18/25	150736
	MUP-18/25-P	1711704
25	MUP-25/25	150736
	MUP-18/25-P	1711704
32	MUP-32	150737
40	MUP-40	150738
50	MUP-50	150739
63	MUP-63	150800
80	MUP-80	158455

11 Foot mounting HP

For dia.	Type	Part no.
18	HP-18	158472
25	HP-25	150731
32	HP-32	150732
40	HP-40	150733
50	HP-50	150734
63	HP-63	150735
80	HP-80	158453

6 Connecting cable NEBU

For size	Description	Type	Part no.
M8x1, 3-pin, with cable			
18 ... 80	Straight socket, 2.5 m	NEBU-M8G3-K-2.5-LE3	541333
	Straight socket, 5 m	NEBU-M8G3-K-5-LE3	541334
18 ... 80	Angled socket, 2.5 m	NEBU-M8W3-K-2.5-LE3	541338
	Angled socket, 5 m	NEBU-M8W3-K-5-LE3	541341
M12x1, 5-pin, with cable			
18 ... 80	Straight socket, 2.5 m	NEBU-M12G5-K-2.5-LE3	541363
	Straight socket, 5 m	NEBU-M12G5-K-5-LE3	541364
18 ... 80	Angled socket, 2.5 m	NEBU-M12W5-K-2.5-LE3	541367
	Angled socket, 5 m	NEBU-M12W5-K-5-LE3	541370

Linear drives DGC, double-acting

FESTO

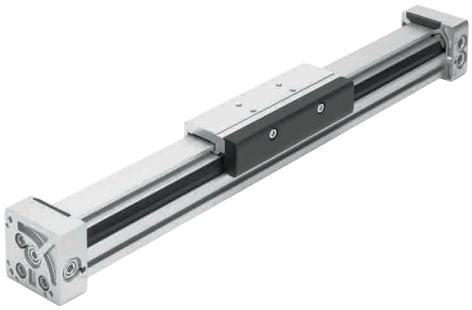

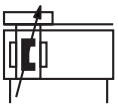

- Compact dimensions
- Quick and sturdy installation and mounting
- High precision and load carrying capacity
- Excellent running characteristics and low air consumption
- Precision interfaces
- Many additional features

Order code

001	002	003	004	005	006	007	008	009	010	011	012	013	014	015	016
DGC –	–	–	–	–	–	–	–	–	–	–	–	–	–	–	+ ZUB –

001	Type
DGC	Linear drive

002	Piston diameter [mm]
...	8, 12, 18, 25, 32, 40, 50, 63

003	Stroke [mm]
...	1 ... 8500

004	Guide
G	Basic design
GF	Plain-bearing guide
KF	Recirculating ball bearing guide
FA	Passive guide axis

005	Cushioning
P	Elastic cushioning rings/pads at both ends
PPV	Pneumatic cushioning, adjustable at both ends
YSR	Self-adjusting shock absorber at both ends
YSRW	Self-adjusting progressive shock absorber at both ends

006	Position sensing
–	Without
O	Via proximity sensor

007	Supply port
–	At the right end or at both ends
DL	At the left end or at both ends
D2	At both ends

008	Slide
–	Standard
GP	Protected recirculating ball bearing guide

009	Lubrication
–	Standard
H1	Lubrication approved for use in food applications

010	Lubrication function
–	Standard
C	Lubrication adapter

011	Additional slide on left
–	Without
KL	Additional slide, standard, on left

012	Additional slide on right
–	Without
KR	Additional slide, standard, on right

013	Clamping unit
–	Without
1H	1-channel holding function

014	Actuation type
–	Without
PN	Pneumatically actuated

015	EU certification
–	Without
EX2	II 3GD in accordance with EU Directive 2014/34/EU
EX3	II 2G in accordance with EU Directive 2014/34/EU

016	Accessories
ZUB –	Accessories enclosed separately
F	Foot mounting (1 piece)
YWZ1	Variable end position, at one end
YWZ2	Variable end position, at both ends
FK	With moment compensator
...V	Connecting cable with plug, 2.5 m (1 ... 10 pieces)
...M	Profile mounting (1 ... 10 pieces)
...G	Proximity sensor, N/O contact with cable, 2.5 m (1 ... 10 pieces)
...H	Proximity sensor, N/O contact with plug (1 ... 10 pieces)
...I	Proximity sensor, N/O contact, contactless with cable, 2.5 m (1 ... 10 pieces)
...J	Proximity sensor, N/O contact, contactless with plug (1 ... 10 pieces)
...L	Slot cover for sensor slot type DGC-G, DGC-GF
...B	Slot cover (1 ... 10 pieces)
Z1	1 intermediate position
Z2	2 intermediate positions
Z3	3 intermediate positions
O	Express waiver – no operating instructions to be included

Legend: Mandatory entry Optional entry

Product options

N NPT thread
GK Standard piston
GV Extended piston

FESTO

Ordering – Product options

Configurable product

This product and all its product options can be ordered using the configurator.

The configurator can be found under Products at
➔ **www.festo.com/catalogue/...**

Enter the type or the configuration part number in the search field.

Configuration part no.

002 Piston dia. [mm]	Type	Part no.
8	DGC-8-...	530906
12	DGC-12-...	530907
18	DGC-18-...	532446
25	DGC-25-...	532447

002 Piston dia. [mm]	Type	Part no.
32	DGC-32-...	532448
40	DGC-40-...	532449
50	DGC-50-...	532450
63	DGC-63-...	532451

Accessories

DGC-8/-12

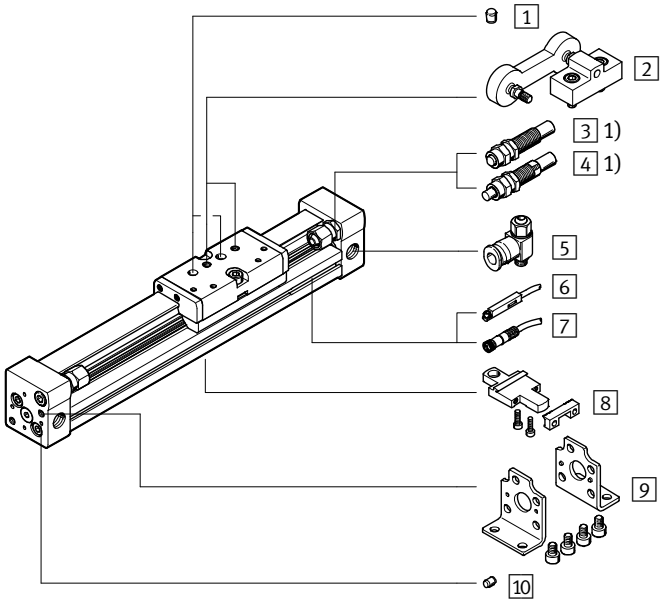

DGC-18 ... 63

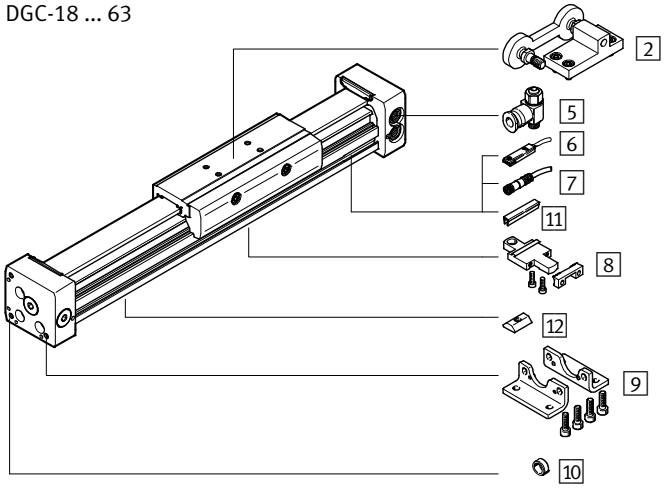

1 Centring pin ZBS[1)]
2 Moment compensator FKC ➔ 39
3 Shock absorber YSR ➔ **ysr**
4 Shock absorber YSRW-DGC ➔ 39
5 One-way flow control valve GRLA ➔ 147
6 Proximity sensor SME-/SMT-8 ➔ **sme-8**
SME-/SMT-10 ➔ **sme-10**
SME-/SMT-8M ➔ 166
SME-/SMT-10M ➔ **sme-10 m**
7 Connecting cable NEBU ➔ 39
8 Profile mounting MUC ➔ 39
9 Foot mounting HPC ➔ 39
10 Centring pin/sleeve ZBS/ZBH ➔ 39
11 Slot cover ABP-S ➔ **abp**
12 Slot nut HMBN ➔ 39

1) Included in the scope of delivery of the drive

FESTO

Accessories

2 Moment compensator FKC

For dia.	Type	Part no.
8	FKC-8/12	529350
12		
18	FKC-18	538714
25	FKC-25	538715
32	FKC-32	538961
40	FKC-40	538962
50	FKC-50/63	545240
63		

4 Shock absorber YSRW-DGC

For dia.	Type	Part no.
For DGC-G		
8	YSRW-DGC-8	540344
12	YSRW-DGC-12	540345
For DGC-GF		
18	YSRW-DGC-18-GF	540346
25	YSRW-DGC-25-GF	540348
32	YSRW-DGC-32-GF	540350
40	YSRW-DGC-40-GF	540352
50	YSRW-DGC-40/50-B	1232870
63	YSRW-DGC-63	543069
For DGC-KF		
18	YSRW-DGC-18-KF	540347
25	YSRW-DGC-25-KF	540349
32	YSRW-DGC-32-KF	540351
40	YSRW-DGC-40/50-B	1232870
50	YSRW-DGC-40/50-B	1232870
63	YSRW-DGC-63	543069

7 Connecting cable NEBU

For size	Description	Type	Part no.
M8x1, 3-pin, with cable			
18 … 63	Straight socket, 2.5 m	NEBU-M8G3-K-2.5-LE3	541333
	Straight socket, 5 m	NEBU-M8G3-K-5-LE3	541334
18 … 63	Angled socket, 2.5 m	NEBU-M8W3-K-2.5-LE3	541338
	Angled socket, 5 m	NEBU-M8W3-K-5-LE3	541341
M12x1, 5-pin, with cable			
18 … 63	Straight socket, 2.5 m	NEBU-M12G5-K-2.5-LE3	541363
	Straight socket, 5 m	NEBU-M12G5-K-5-LE3	541364
18 … 63	Angled socket, 2.5 m	NEBU-M12W5-K-2.5-LE3	541367
	Angled socket, 5 m	NEBU-M12W5-K-5-LE3	541370

8 Profile mounting MUC

For dia.	Type	Part no.
8	MUC-8	526384
12	MUC-12	526387
18	MUC-18	531752
25	MUC-25	531753
32	MUC-32	531754
40	MUC-40	531755
50	MUC-50	531756
63	MUC-63	531757

9 Foot mounting HPC

For dia.	Type	Part no.
8	HPC-8	526385
12	HPC-12	526388
18	HPC-18	533667
25	HPC-25	533668
32	HPC-32	533669
40	HPC-40	533670
50	HPC-50	545236
63	HPC-63	545237

10 Centring pin/sleeve ZBS/ZBH[1)]

For dia.	Description	Type	Part no.
For DGC-G			
8, 12	For slide	ZBS-5	150928
8, 12	For end cap	ZBS-2	525273
50, 63		ZBH-9	150927
For DGC-GF			
18	For slide	ZBS-5	150928
25 … 63		ZBH-9	150927
50, 63	For end cap	ZBH-9	150927
For DGC-KF			
8, 12, 18	For slide	ZBS-5	150928
25 … 63		ZBH-9	150927
8, 12	For end cap	ZBH-2	525273
18		ZBS-5	150928
25 … 63		ZBH-9	150927

1) Packaging unit 10 pieces.

12 Slot nut HMBN[1)]

For dia.	Type	Part no.
25, 32, 40	HMBN-5-1M5	547264
50, 63	HMBN-5-2M5	186566

1) Packaging unit 10 pieces.

Semi-rotary drives DRVS, double-acting

FESTO

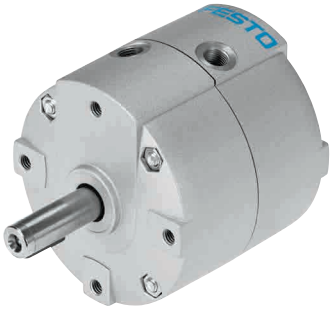

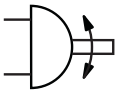

- Modern and compact design
- Lighter than other semi-rotary drives
- Housing protected against splash water and dust
- Selected types in accordance with ATEX directive for potentially explosive atmospheres
  ➔ **www.festo.com/en/ex**

Order code – Basic design

001	002	003	004	005
DRVS	–	–	– P	–

Legend: Mandatory entry; Optional entry

001	Type
DRVS	Semi-rotary drive

002	Size
...	6, 8, 12, 16, 25, 32, 40

003	Nominal swivel angle [°]
...	90, 180, 270

004	Cushioning
P	Elastic cushioning rings/pads at both ends

005	EU certification
–	None

Product options

EX4 EU certification (II 2GD)

Ordering – Product options

Configurable product

This product and all its product options can be ordered using the configurator.

The configurator can be found under Products at
➔ **www.festo.com/catalogue/...**

Enter the type or the configuration part number in the search field.

Ordering – Basic design

003 **Nominal swivel angle [°]**	002 **Size**						
	6	8	12	16	25	32	40
	004 **Elastic cushioning rings/pads at both ends**						
	P	P	P	P	P	P	P
90	1845706	1845708	1845710	1845713	1845716	1845719	1845722
180	1845707	1845709	1845711	1845714	1845717	1845720	1845723
270			1845712	1845715	1845718	1845721	1845724

FESTO

Accessories

Sizes: 6, 8

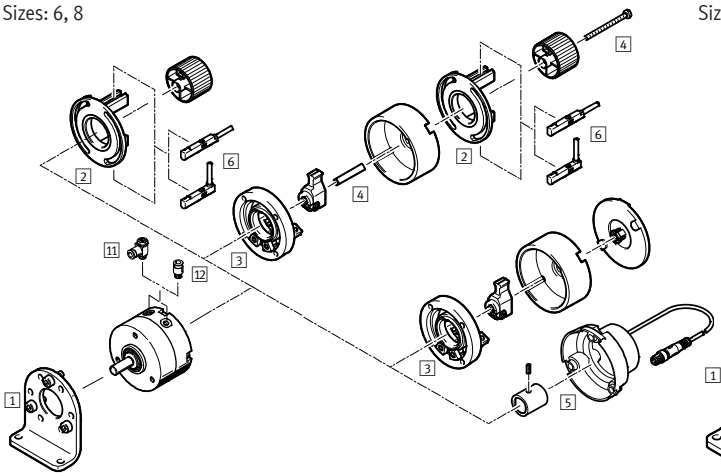

Size 12 … 40

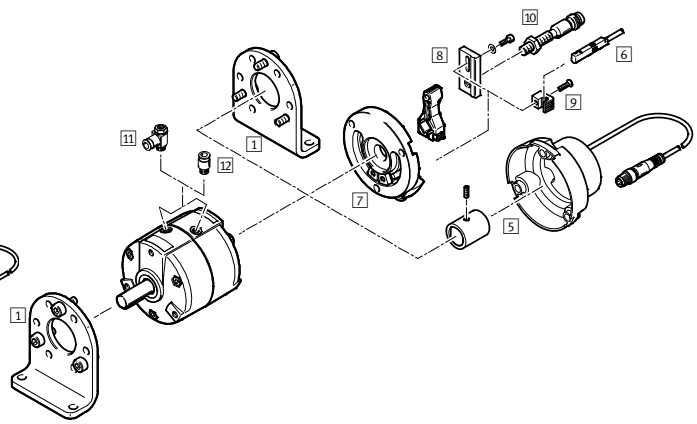

1 Foot mounting DAMH[1] ➔ 41
2 Mounting kit WSM-…-SME-10 ➔ drvs
3 Stop kit KSM ➔ 41
4 Adapter kit DADP-AK ➔ 41
5 Position sensor SRBS ➔ 172
6 Proximity sensor SME-/SMT-10 ➔ sme-10
7 Adapter kit DADP-ES ➔ 41
8 Sensor bracket SL-DSM-S ➔ drvs
9 Sensor bracket SL-DSM-B ➔ drvs
10 Proximity sensor SIEN ➔ 41
11 One-way flow control valve GRLA ➔ 147
12 Push-in fitting QS ➔ 212
Connecting cable NEBU ➔ 41

1) Size 6, 8: The foot mounting can only be mounted at the front.

1 Foot mounting DAMH

For size	Type	Part no.
6	DAMH-Q12-6	3371840
8	DAMH-Q12-8	3371841
12	DAMH-Q12-12	3371842
16	DAMH-Q12-16	3371843
25	DAMH-Q12-25	3371844
32	DAMH-Q12-32	3371845
40	DAMH-Q12-40	3371846

3 Stop kit KSM

For size	Type	Part no.
6	KSM-6	175833
8	KSM-8	175834

4 Adapter kit DADP-AK

For size	Type	Part no.
6	DADP-AK-Q1-6	3617044
8	DADP-AK-Q1-8	3617045

7 Stop kit DADP-ES

For size	Type	Part no.
12	DADP-ES-Q12-12	2536502
16	DADP-ES-Q12-16	2536503
25	DADP-ES-Q12-25	2536504
32	DADP-ES-Q12-32	2536505
40	DADP-ES-Q12-40	2536506

10 Inductive proximity sensor SIEN

For size	Description	Type	Part no.
N/O contact, M5			
12 … 40	PNP, cable, 2.5 m	SIEN-M5B-PS-K-L	150370
	PNP, plug	SIEN-M5B-PS-S-L	150371
N/C contact, M5			
12 … 40	PNP, cable, 2.5 m	SIEN-M8B-PS-K-L	150386
	PNP, plug	SIEN-M8B-PS-S-L	150387

12 Connecting cable NEBU

For size	Description	Type	Part no.
M8x1, 3-pin, with cable			
6 … 40	Straight socket, 2.5 m	NEBU-M8G3-K-2.5-LE3	541333
	Straight socket, 5 m	NEBU-M8G3-K-5-LE3	541334
6 … 40	Angled socket, 2.5 m	NEBU-M8W3-K-2.5-LE3	541338
	Angled socket, 5 m	NEBU-M8W3-K-5-LE3	541341

Twin-piston semi-rotary drives DRRD, double-acting

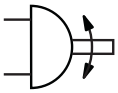

- Very high accuracy in the end positions
- Very high bearing load capacity
- Very good axial run-out at the flanged shaft
- Very high mass moments of inertia
- Selected types in accordance with ATEX directive for potentially explosive atmospheres
  ➔ **www.festo.com/en/ex**

Order code – Basic design

001		002		003		004		005	006
DRRD	–		–	**180**	–	**FH**	–		**A**

Legend: [ ] Mandatory entry

001	Type
DRRD	Double-acting semi-rotary drive

002	Size
...	16, 20, 25, 32, 40

003	Nominal swivel angle
180	180°

004	Output shaft
FH	Flanged shaft, hollow

005	Cushioning
P	Elastic cushioning rings/plates at both ends
Y9	Linear shock absorber, self-adjusting at both ends
Y12	Linear shock absorber, self-adjusting at both ends, external

006	Position sensing
A	Via proximity sensor

Product options

8, 10, 12, 50, 63 Sizes

P2 Energy throughfeed: pneumatic, 2 channels
P4 Energy throughfeed: pneumatic, 4 channels
P8 Energy throughfeed: pneumatic, 8 channels
P2E2 Energy throughfeed: pneumatic, 2 channels; electric, 2 signals
P4E6 Energy throughfeed: pneumatic, 4 channels; electric, 6 signals
P8E8 Energy throughfeed: pneumatic, 8 channels; electric, 8 signals
Y10 Cushioning: linear shock absorber, self-adjusting at both ends, hard, internal
Y12 Cushioning: linear shock absorber, self-adjusting at both ends, external
EX4 EU certification (II 2 GD)
PS1 1 intermediate position
E1 End-position locking at both ends
R Sensor mounting, external: mounting rail for proximity sensor
SG Splash-proof design
DN Without operating instructions

Ordering – Product options

Configurable product

This product and all its product options can be ordered using the configurator.

The configurator can be found under Products at
➔ **www.festo.com/catalogue/...**

Enter the type or the configuration part number in the search field.

Ordering – Basic design

002 **Size**	Type	Part no.
16	DRRD-16-180-FH-PA	1577238
	DRRD-16-180-FH-Y9A	1644389
20	DRRD-20-180-FH-PA	1395606
	DRRD-20-180-FH-Y9A	1427379
25	DRRD-25-180-FH-PA	1359980
	DRRD-25-180-FH-Y9A	1360248

002 **Size**	Type	Part no.
32	DRRD-32-180-FH-PA	1578512
	DRRD-32-180-FH-Y9A	1578518
35	DRRD-35-180-FH-PA	1526825
	DRRD-35-180-FH-Y9A	1547102
40	DRRD-40-180-FH-PA	1503269
	DRRD-40-180-FH-Y9A	1526986

FESTO

Accessories

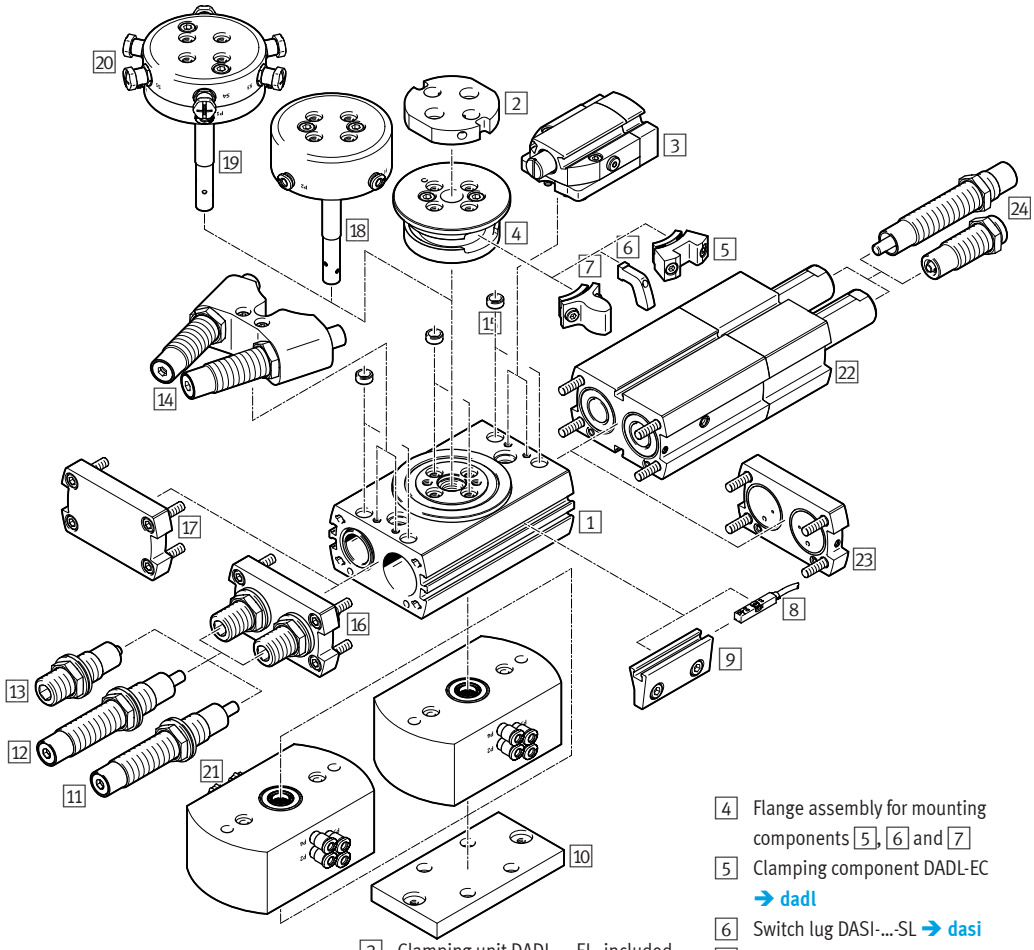

1 Semi-rotary drive DRRD ➔ 42
2 Adapter kit DHAA-G for gripper ➔ dhaa-g
3 Clamping unit DADL-...-EL, included in the scope of delivery: 3, 4, 2x 5 ➔ dadl
End-position locking, product option E1
4 Flange assembly for mounting components 5, 6 and 7
5 Clamping component DADL-EC ➔ dadl
6 Switch lug DASI-...-SL ➔ dasi
7 Stop element, product option Y128
Proximity sensor SMT-/SME-8M ➔ 43
Position transmitter SMAT-8M ➔ smat
9 Sensing kit DASI-...-KT ➔ dasi
Included in the scope of delivery: 4, 2x 6, 2x 9
Sensor mounting, product option R
10 Adapter kit DHAA-D for drives ➔ dhaa-d
11 Shock absorber, product option Y9
12 Shock absorber, hard, product option Y10
13 Shock absorber, product option P
14 Shock absorber, external, product option Y12,
included in the scope of delivery: 4, 2x 7, 14
15 Centring sleeve ZBH ➔ zbh
16 End cap: in combination with elastic cushioning element P or shock absorber Y9, Y10
17 End cap: in combination with external shock absorber Y12
18 Energy throughfeed, pneumatic, product option P2, P4, P8
19 Energy throughfeed, pneumatic/electric, product option E2P2, P4E6, P8E8
20 Connecting cable NEBU from the energy throughfeed to the proximity sensor ➔ 43
21 Connecting cable NEBU from the energy throughfeed to the controller ➔ 43
22 Intermediate position, product option PS1
23 Connection cap for supply ports
24 Shock absorber DYSC-Y1F ➔ dysc

8 Proximity sensor SME-8/SMT-8M, insertable in the slot lengthwise

Description	Type	Part no.
Magnetic reed		
Cable, 2.5 m, 3-wire	SME-8-K-LED-24	150855
Plug M8x1, 3-pin	SME-8-S-LED-24	150857
Magneto-resistive		
Cable, 2.5 m, 3-wire	SMT-8M-A-PS-24 V-E-2,5-OE	574335
Plug M8x1, 3-pin	SMT-8M-A-PS-24 V-E-0,3-M8D	574334

8 Proximity sensor SME-8M, insertable in the slot from above

Description	Type	Part no.
Magnetic reed		
Cable, 2.5 m, 3-wire	SME-8M-DS-24 V-K-2,5-OE	543862
Cable, 5 m, 3-wire	SME-8M-DS-24 V-K-5,0-OE	543863
Plug M8x1, 3-pin	SME-8M-DS-24 V-K-0,3-M8D	543861

20 Connecting cable NEBU, input

For size	Description	Type	Part no.
M8x1, 3-pin, with cable			
16, 20	Straight socket, 2.5 m	NEBU-M8G3-K-2.5-LE3	541333
	Straight socket, 5 m	NEBU-M8G3-K-5-LE3	541334
M8x1, 4-pin, with cable			
25, 32, 35	Straight socket, 2.5 m	NEBU-M8G4-K-2.5-LE4	541342
	Straight socket, 5 m	NEBU-M8G4-K-5-LE4	541343
M12x1, 5-pin, with cable			
40	Straight socket, 2.5 m	NEBU-M12G5-K-2.5-LE4	550326
	Straight socket, 5 m	NEBU-M12G5-K-5-LE4	541328

21 Connecting cable NEBU

For size	Description	Type	Part no.
M8x1, 4-pin, with cable			
16, 20, 25, 32, 40	Straight socket, 2.5 m	NEBU-M8G4-K-2.5-LE4	541342
	Straight socket, 5 m	NEBU-M8G4-K-5-LE4	541343
16, 20, 25, 32, 40	Angled socket, 2.5 m	NEBU-M8W4-K-2.5-LE4	541344
	Angled socket, 5 m	NEBU-M8W4-K-5-LE4	541345

Mini slides DGSL, double-acting

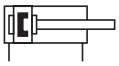

- High load capacity and positioning accuracy
- Maximum movement precision thanks to ground-in ball bearing cage guide
- Maximum flexibility thanks to eight sizes
- Reliable in the event of pressure drop thanks to clamping unit and end-position locking
- Versatile mounting options

Order code – Basic design

001	002	003	004	005
DGSL				C

Legend: Mandatory entry Optional entry

001	Type
DGSL	Mini slide

002	Size
...	8, 10, 12, 16, 20

003	Stroke [mm]
...	10, 20, 30, 40, 50, 80, 100, 150, 200

004	Cushioning
P	Elastic cushioning without metal end position, adjustable
Y3	Progressive shock absorber, at both ends

005	Position sensing
O	Via proximity sensor

Product options

4, 8, 25 Sizes

N NPT thread
C Clamping unit attached
E3 End-position locking with retracted piston rod

P1 Elastic cushioning with metal end position, adjustable
Y11 Progressive shock absorber with reducing sleeve, at both ends
N No cushioning

E Elastic cushioning without metal end position, adjustable, short design

Ordering – Product options

Configurable product

This product and all its product options can be ordered using the configurator.

The configurator can be found under Products at
➔ **www.festo.com/catalogue/...**

Enter the type or the configuration part number in the search field.

FESTO

Ordering – Basic design

003 Stroke [mm]	002 Size					002 Size				
	8	10	12	16	20	8	10	12	16	20
	004 Elastic cushioning without metal end position, at both ends					004 Progressive shock absorber, at both ends				
	P	P	P	P	P	Y3	Y3	Y3	Y3	Y3
10	543926	543942	543961	543983	544005					
20	543927	543943	543962	543984	544006					
30	543928	543944	543963	543985	544007	543938	543956	543977	543999	544023
40	543929	543945	543964	543986	544008	543939	543957	543978	544000	544024
50	543930	543946	543965	543987	544009	543940	543958	543979	544001	544025
80	543931	543947	543966	543988	544010	543941	543959	543980	544002	544026
100		543948	543967	543989	544011	543982	543960	543981	544003	544027
150			543968	543990	544012			543982	544004	544028
200					544013					544029

Accessories

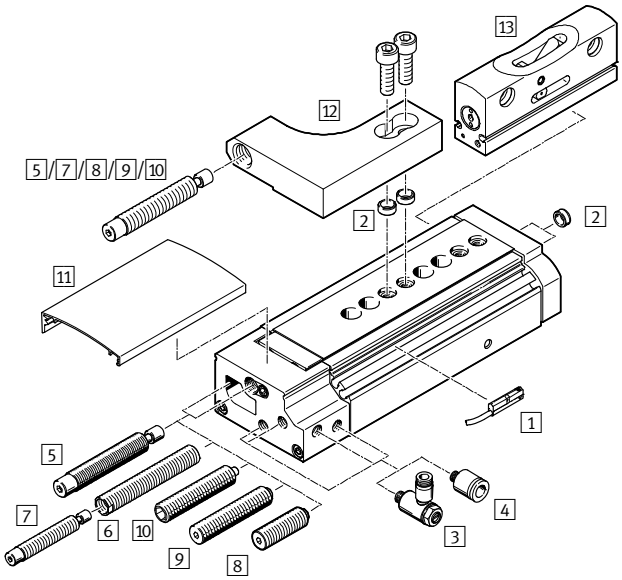

1 Proximity sensor SME-/SMT-10M → sme-10
2 Centring sleeve ZBH → 45
3 One-way flow control valve GRLA → 147
4 Push-in fitting QSM → 217
5 Cushioning with shock absorber Y3 → 45
6 Reducing sleeve DAYH → 45
7 Shock absorber DYSW → 45
8 Cushioning E → dgsl
9 Cushioning P → 45
10 Cushioning with stop P1 → dgsl
11 Cover DADS → dads
12 Shock absorber retainer DADP → dgsl
13 Intermediate position module DADM → dgsl

Connector sleeve ZBV → 45
Connecting cable NEBU → 45
Drive/drive connections → dgsl
Drive/gripper connections → dgsl

2 Centring sleeve ZBH[1)]

For	Type	Part no.
8, 10, 12, 16	ZBH-7	186717
20	ZBH-9	150927

1) Packaging unit 10 pieces

6 Reducing sleeve DAYH

For	Type	Part no.
10	DAYH-4	1165476
12	DAYH-5	1165480
16	DAYH-7	1165484
20	DAYH-8	1165488

Connector sleeve ZBV[2)]

For	Type	Part no.
8	ZBV-M4-7	548802
10		
12	ZBV-M5-7	548803
16		
20	ZBV-M6-9	548804

2) Packaging unit 3 pieces

5/7 Shock absorber Y3

For	Type	Part no.
8	DYSW-4-6-Y1F	548070
10	DYSW-5-8-Y1F	548071
12	DYSW-7-10-Y1F	548072
16	DYSW-8-14-Y1F	548073
20	DYSW-10-17-Y1F	548074

9 Shock absorber P

For	Type	Part no.
8	DYEF-M6-Y1	1179831
10	DYEF-M8-Y1	1179834
12	DYEF-M10-Y1	1179837
16	DYEF-M12-Y1	1179840
20	DYEF-M14-Y1	1179863

Connecting cable NEBU

For size	Description	Type	Part no.
M8x1, 3-pin, with cable			
8, 10, 12, 16, 20	Straight socket, 2.5 m	NEBU-M8G3-K-2.5-LE3	541333
	Straight socket, 5 m	NEBU-M8G3-K-5-LE3	541334
8, 10, 12, 16, 20	Angled socket, 2.5 m	NEBU-M8W3-K-2.5-LE3	541338
	Angled socket, 5 m	NEBU-M8W3-K-5-LE3	541341

Guided drives DFM, double-acting

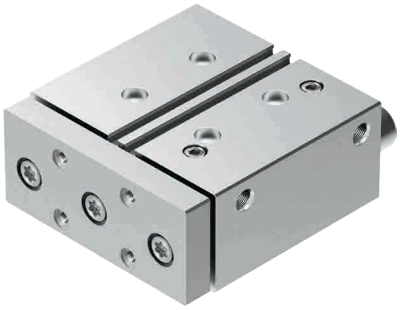

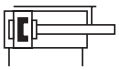

- Drive and guide unit in a single housing
- Sturdy and precise
- Plain or recirculating ball bearing guide
- High resistance to torques and lateral forces
- Wide range of applications

Order code – Basic design

001	002	003	004	005	006
DFM			P	C	

Legend: Mandatory entry

001	Type
DFM	Double-acting guided drive

002	Piston diameter [mm]
...	12, 16, 20, 25, 32, 40, 50, 63

003	Stroke [mm]
...	10, 20, 25, 30, 40, 50, 80, 100, 125, 160, 200

004	Cushioning
P	Elastic cushioning rings/pads at both ends

005	Position sensing
O	Via proximity sensor

006	Guide
GF	Plain-bearing guide
KF	Recirculating ball bearing guide

Product options

80, 100 mm	Piston diameter
10 ... 400 mm	Variable stroke

S6 Heat-resistant seals up to max. 120 °C

AJ Precision adjustment in the end positions, advanced

EJ Precision adjustment in the end positions, retracted

EX3 II 2G in accordance with EU Directive 2014/34/EU

Ordering – Product options

Configurable product

This product and all its product options can be ordered using the configurator.

The configurator can be found under Products at
➔ **www.festo.com/catalogue/...**

Enter the type or the configuration part number in the search field.

FESTO

Ordering – Basic design

003 Stroke [mm]	Piston diameter [mm]							
	12	16	20	25	32	40	50	63
	Cushioning – Position sensing – Guide							
	P – A – GF	P – A – GF	P – A – GF	P – A – GF	P – A – GF	P – A – GF	P – A – GF	P – A – GF
10	170824	170832						
20	170825	170833	170840	170847	170854			
25	170826	170834	170841	170848	170855	170864	170871	170878
30	170827	170835	170842	170849	170856			
40	170828	170836	170843	170850	170857			
50	170829	170837	170844	170851	170858	170865	170872	170879
80	170830	170838	170845	170852	170859	170866	170873	170880
100	170831	170839	170846	170853	170860	170867	170874	170881
125					170861	170868	170875	170882
160					170862	170869	170876	170883
200					170863	170870	170877	170884
	Cushioning – Position sensing – Guide							
	P – A – KF	P – A – KF	P – A – KF	P – A – KF	P – A – KF	P – A – KF	P – A – KF	P – A – KF
10	170899	170907						
20	170900	170908	170915	170922	170929			
25	170901	170909	170916	170923	170930	170939	170946	170953
30	170902	170910	170917	170924	170931			
40	170903	170911	170918	170925	170932			
50	170904	170912	170919	170926	170933	170940	170947	170954
80	170905	170913	170920	170927	170934	170941	170948	170955
100	170906	170914	170921	170928	170935	170942	170949	170956
125					170936	170943	170950	170957
160					170937	170944	170951	170958
200					170938	170945	170952	170959

Accessories

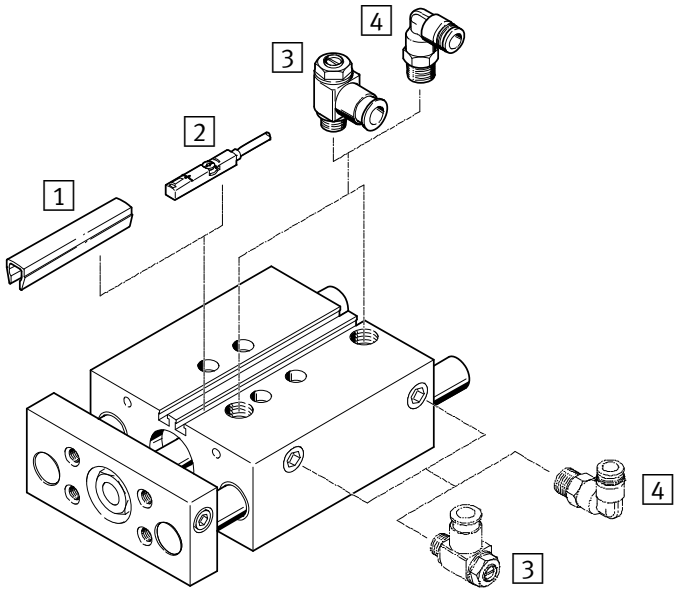

1 Slot cover ABP-5-S ➔ abp-5-s
2 Proximity sensor SME-/SMT-8M ➔ 166,
SME-/SMT-8 ➔ sme-8
3 One-way flow control valve GRLA ➔ 147
4 Push-in fitting QS ➔ 212

Piston rod attachments SG, SGS, FK

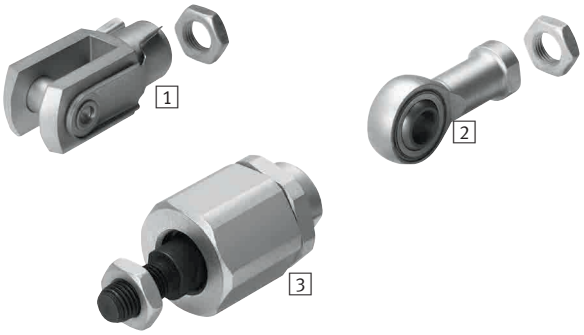

- Coordinated with Festo's cylinder range
- Versatile combinations
- Sturdy and functional
- Stainless steel variants

1 Rod clevis SG: permits a swivelling movement of the cylinder in one plane
2 Rod eye SGS: with spherical bearing
3 Self-aligning rod coupler FK: for compensating radial and angular deviations

Order code

001 002

[ ] – [ ]

Legend: [ ] Mandatory entry

001	Type
SG	Rod clevis
sgs	Rod eye
FK	Self-aligning rod coupler

002	Piston rod thread
M6	Male thread M6
M8	Male thread M8
M10x1,25	Male thread M10x1.25
M12x1,25	Male thread M12x1.25
M16x1,5	Male thread M16x1.5
M20x1,5	Male thread M20x1.5

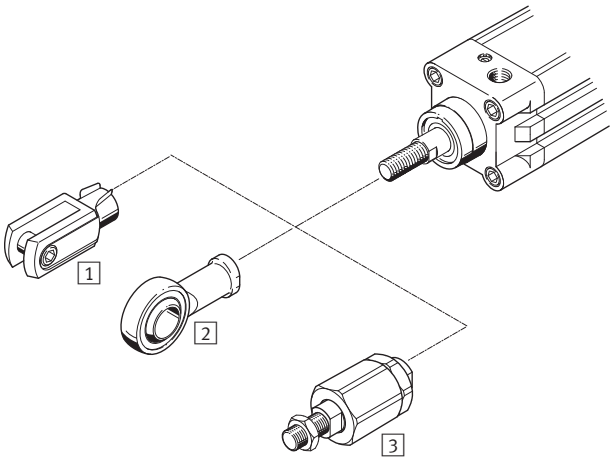

Product options

CRSG Rod clevis in corrosion and acid-resistant design, conforms to ISO 8140
CRSGS Rod eye in corrosion and acid-resistant design, conforms to ISO 12240-4 dimensional series K
CRFK Self-aligning rod coupler in corrosion and acid-resistant design

Ordering

For cylinder	Piston diameter [mm]	002 Piston rod thread	001 Type 1 SG	2 SGS	3 FK
DSNU	12	M6	3110	9254	2061
DSNU	16	M6	3110	9254	2061
DSNU	20	M8	3111	9255	2062
DSNU	25	M10x1,25	6144	9261	6140
DSBC	32	M10x1,25	6144	9261	6140
DSBC	40	M12x1,25	6145	9262	6141
DSBC	50	M16x1,5	6146	9263	6142
DSBC	63	M16x1,5	6146	9263	6142
DSBC	80	M20x1,5	6147	9264	6143
DSBC	100	M20x1,5	6147	9264	6143

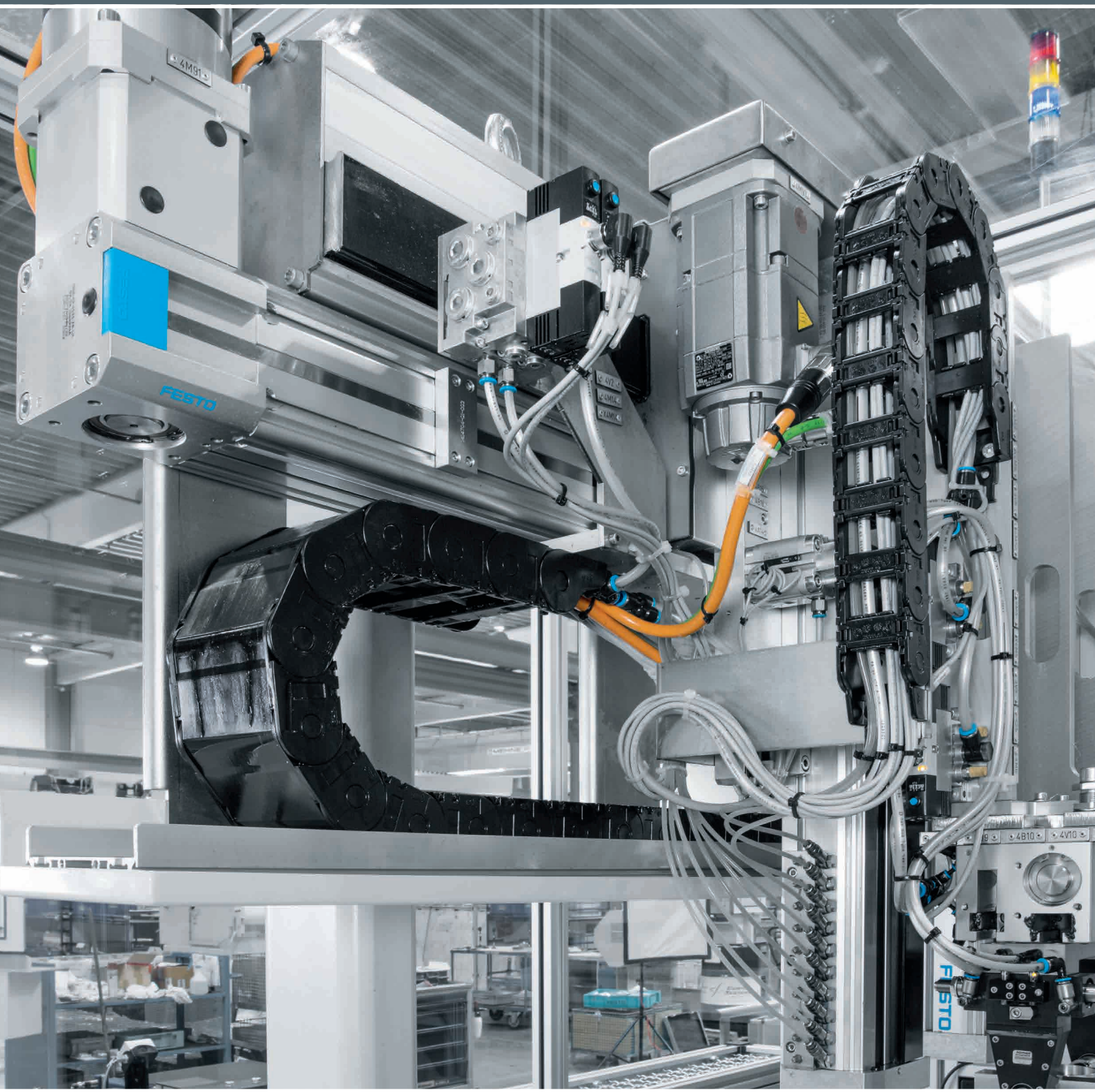

Electromechanical drives

02

Highlights

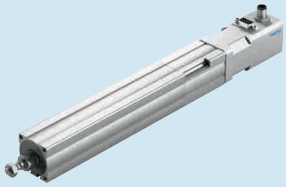

EPCO
Electric cylinders

+ With permanently attached motor
+ With ball screw

Page 54

ESBF
Electric cylinders

+ High feed forces with compact size
+ Optionally with high corrosion protection

Page 57

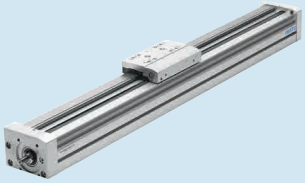

EGC-BS-KF
Spindle axes

+ Spindle support enables maximum travel speed
+ Optionally with clamping unit

Page 70

ERMO
Rotary drives

+ For simple rotary movements
+ With through-hole for energy throughfeed

Page 76

Contents

Product overview 51
Electric cylinders EPCO, with spindle drive 54
Electric cylinders ESBF, with spindle drive. 57
Toothed belt axes EGC-TB-KF, with recirculating ball bearing guide. 61
Mini-Slides EGSC-BS 64
Spindle axes EGSC-BS-KF, with recirculating ball bearing guide. 66
Toothed belt axes ELGC-TB-KF, with recirculating ball bearing guide. 68
Spindle axes EGC-BS-KF, with recirculating ball bearing guide 70
Toothed belt axes ELGA-TB, with recirculating ball bearing guide KF/roller bearing guide RF 73
Rotary drives ERMO, electric 76

FESTO

Software tool

PositioningDrives		Which electromechanical linear drive best meets your needs? Enter the data for your application such as position values, effective loads and mounting position, and the software suggests a number of solutions, from the controller to the motor to the electric axis.	This tool can be found • on our website at www.festo.com/catalogue by clicking on the blue button “Engineering”

2

Linear drives and slides

	 Electric cylinders **EPCO**	 **Electric cylinders** **ESBF**	 **Spindle axes** **EGC-BS-KF**
Size	16, 25, 40	32, 40, 50, 63, 80, 100	70, 80, 120, 185
Max. feed force Fx	50 … 650 N	1000 … 17000 N	300 … 3000 N
Repetition accuracy	+/–0.02 mm	+/–0.01 mm, +/–0.015 mm, +/–0.05 mm	+/–0.02 mm
Stroke	1 … 400 mm	30 … 1500 mm	50 … 3000 mm
Description	• Linear drive with permanently attached motor • With ball screw • Optional: encoder, holding brake and female thread on the piston rod • Two different spindle pitches for high force or high speed • Suitable for simple applications in factory automation that in the past were mostly carried out using pneumatic solutions • Cost-optimised • Precision and backlash-free guide	• Available as spindle drive with ball screw (size 32 … 100) or lead screw (size 32 … 50) • Optional: high corrosion protection, degree of protection IP65, food-safe in certain circumstances, piston rod extension • Ball screw: three spindle pitches make it possible to select the optimal force-speed ratio • 68 types in stock with short delivery time and modular products for individual specifications • Axial or parallel motor mounting	• Recirculating ball bearing guide for high loads and torques • Optionally with clamping unit, at one or both ends • Profile with optimised rigidity • Various spindle pitches • The spindle support enables maximum travel speed • Axial or parallel motor mounting
➔ Page/online	**54**	**57**	**70**

Linear drives and slides

	 Toothed belt axes **EGC-TB-KF**	 **Mini-Slides** **EGSC-BS**	 **Spindle axes** **ELGC-BS-KF**	 **Toothed belt axes** **ELGC-TB-KF**
Size	50, 70, 80, 120, 185	25, 32, 45, 60	32, 45, 60, 80	45, 60, 80
Max. feed force Fx	50 … 2500 N	50 … 340 N	110 … 780 N	75 … 250 N
Repetition accuracy	+/–0.08 mm, +/–0.1 mm	±0.02 mm	±0.0015 mm, ±0.01 mm	+/–0.1 mm
Stroke	50 … 8500 mm	25 … 200 mm	100 … 1000 mm	200 … 2000 mm
Description	• Recirculating ball bearing guide for high loads and torques • Optionally with clamping unit, at one or both ends • Profile with optimised rigidity • 22 types in stock with short delivery time and modular products for individual specifications	• Precise guide and ball screw • Compact dimensions • Flexible motor mounting • The toothed belt axes, spindle axes ELGC and mini slides EGSC form a scalable modular system for compact automation	• Internal guide and ball screw • Space-saving position sensing • Flexible motor mounting • The toothed belt axes, spindle axes ELGC and mini slides EGSC form a scalable modular system for compact automation	• Internal guide and toothed belt • Precise and resilient guide • Flexible motor mounting • The toothed belt axes, spindle axes ELGC and mini slides EGSC form a scalable modular system for compact automation
➔ Page/online	**61**	**64**	**66**	**68**

FESTO

2

Linear drives and slides

	Spindle axes ELGA-BS-KF	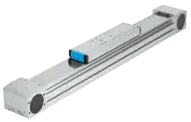 Toothed belt axes ELGA-TB-G	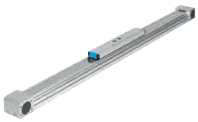 Toothed belt axes ELGA-TB-RF
Size	70, 80, 120, 185	70, 80, 120	70, 80, 120
Max. feed force Fx	300 … 3000 N	350 … 1300 N	260 … 1000 N
Repetition accuracy	+/–0.02 mm	+/–0.08 mm	+/–0.08 mm
Stroke	50 … 3000 mm	50 … 8500 mm	50 … 7400 mm
Description	• Internal, precision recirculating ball bearing guide with high load capacity for high torque loads • Guide and ball screw protected by cover band • Precise and resilient guide • For the highest requirements in terms of feed force and accuracy • Space-saving position sensing • Flexible motor connection	• Integrated plain-bearing guide • For small and medium loads • Guide and toothed belt protected by cover band • Low guide backlash • Actuator for external guides • Flexible motor mounting • Motor can be mounted on any one of four sides	• Integrated roller bearing guide • Guide backlash = 0 mm • Very good operating performance under torque load • Sturdy alternative to the recirculating ball bearing guide • As a driving component for external guides, especially for high speeds • Motor can be mounted on any one of four sides • Optionally suitable for the food zone
➔ **Page/online**	elga-bs	elga-tb	73

Linear drives and slides

	Toothed belt axes ELGA-TB-KF	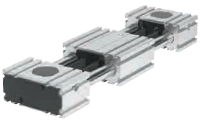 Toothed belt axes ELGR
Size	70, 80, 120, 150	35, 45, 55
Max. feed force Fx	260 … 2000 N	50 … 350 N
Repetition accuracy	+/–0.08 mm, +/–0.1 mm	+/–0.1 mm
Stroke	50 … 8500 mm	50 … 1500 mm
Description	• Internal, precision recirculating ball bearing guide with high load capacity for high torque loads • Guide and toothed belt protected by cover band • Optionally suitable for the food zone • High feed forces • Flexible motor connection • 22 types in stock with short delivery time and modular products for individual specifications	• Optimum price/performance ratio • Ready-to-install unit for quick and easy design • With plain or recirculating ball bearing guide • Motor can be mounted on any one of four sides • Also available as OMS (Optimised Motion Series) product
➔ **Page/online**	73	elgr

FESTO

Semi-rotary drives

	Rotary drives **ERMO**
Size	12, 16, 25, 32
Max. driving torque	0.15 … 5 Nm
Max. input speed	50 … 100 rpm
Rotation angle	Infinite
Description	• Electric rotary drive with stepper motor and integrated gear unit • ServoLite – closed-loop operation with encoder • Heavy-duty bearing for high forces and torques • Backlash-free pre-stressed rotating plate with very good axial eccentricity and concentricity properties • Quick and accurate installation • For simple rotary indexing table applications and as a rotary axis in multi-axis applications • Also available as OMS (Optimised Motion Series) product
➔ **Page/online**	**76**

Linear guides

	Guide units **EAGF**
Size	16, 25, 32, 40, 50, 63, 80, 100
Stroke	1 … 500 mm
Guide	Recirculating ball bearing guide
Description	• For electric cylinder EPCO and ESBF • For absorbing high process forces and torques • High guide precision
➔ **Page/online**	**56**

Customised components – for your specific requirements

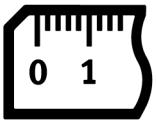

Drives with customised designs
Can't find the electromechanical drive you need in our catalogue?
We can offer you customised components that are tailored to your specific requirements.

Common product modifications:
- Special strokes
- Design for special ambient conditions
- Design optimised for the fitting space
- Design with carriages moving in opposite directions
- Design with absolute encoder

Many additional variants are possible. Ask your Festo sales engineer, who will be happy to help.
➔ **www.festo.com/contact**

Electric cylinders EPCO, with spindle drive

FESTO

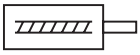

- Mechanical linear drive with piston rod and permanently attached stepper motor
- With ball screw
- Compact dimensions
- Extensive mounting accessories for various installation situations
- Suitable for simple applications in factory automation that in the past were mostly carried out using pneumatic solutions
- The electric cylinder EPCO and controller CMMO form one unit

Order code

001	002	003	004	005	006	007	008	009	010	011	012	013	014	015	016
EPCO	–		...P				ST					+	+		

Legend: Mandatory entry; Optional entry

001	Type
EPCO	Electric cylinder

002	Size
...	16, 25, 40

003	Stroke [mm]
...	50, 75, 100, 125, 150, 175, 200, 250, 300, 350, 400

004	Spindle pitch [mm]
...P	3, 5, 8, 10, 12.7

005	Piston rod thread type
–	Male thread
F	Female thread

006	Piston rod extension [mm]
–	Without
...E	1 ... 200

007	Position sensing
–	Without
O	Via proximity sensor

008	Motor type
ST	Stepper motor

009	Measuring unit
–	Without
E	Encoder

010	Brake
–	Without
B	Brake

011	Cable outlet direction
–	Top (standard)
D	Bottom
L	Left
R	Right

012	Guide unit
–	Without
KF	Recirculating ball bearing guide with two guide rods

013	Connecting cable to motor controller, suitable for use with energy chains
–	Without
1.5E	1.5 m, straight plug
1.5EA	1.5 m, angled plug
2.5E	2.5 m, straight plug
2.5EA	2.5 m, angled plug
5E	5 m, straight plug
5EA	5 m, angled plug
7E	7 m, straight plug
7EA	7 m, angled plug
10E	10 m, straight plug
10EA	10 m, angled plug

014	Controller type
–	Without
C5	CMMO, 5 A

015	Bus protocol/activation
–	Without
DIO	Digital I/O interface
LK	IO-Link®

016	Switching input/output
–	Without
N	NPN
P	PNP

FESTO

Ordering data

Configurable product	**This product and all its product options can be ordered using the configurator.**	The configurator can be found under Products at ➔ **www.festo.com/catalogue/...**	Enter the type or the configuration part number in the search field.

Configuration part no.

002 Size	Type	Part no.
16	EPCO-16-ST	1476585
25	EPCO-25-ST	1470874
40	EPCO-40-ST	1472887

Ordering data – Electric cylinders EPCO with encoder

004 Spindle pitch [mm]	003 Stroke [mm]	002 Size					
		16		25		40	
		Type	Part no.	Type	Part no.	Type	Part no.
3	50	EPCO-16-50-3P-ST-E	1476415	EPCO-25-50-3P-ST-E	1470698		
	100	EPCO-16-100-3P-ST-E	1476417	EPCO-25-100-3P-ST-E	1470700		
	150	EPCO-16-150-3P-ST-E	1476419	EPCO-25-150-3P-ST-E	1470702		
	200	EPCO-16-200-3P-ST-E	1476421	EPCO-25-200-3P-ST-E	1470704		
	300			EPCO-25-300-3P-ST-E	1470706		
5	50					EPCO-40-50-5P-ST-E	1472501
	100					EPCO-40-100-5P-ST-E	1472503
	150					EPCO-40-150-5P-ST-E	1472505
	200					EPCO-40-200-5P-ST-E	1472507
	300					EPCO-40-300-5P-ST-E	1472509
8	50	EPCO-16-50-8P-ST-E	1476522				
	100	EPCO-16-100-8P-ST-E	1476524				
	150	EPCO-16-150-8P-ST-E	1476526				
	200	EPCO-16-200-8P-ST-E	1476528				
	300						
10	50			EPCO-25-50-10P-ST-E	1470769		
	100			EPCO-25-100-10P-ST-E	1470771		
	150			EPCO-25-150-10P-ST-E	1470773		
	200			EPCO-25-200-10P-ST-E	1470775		
	300			EPCO-25-300-10P-ST-E	1470777		
12.7	50					EPCO-40-50-12.7P-ST-E	1472617
	100					EPCO-40-100-12.7P-ST-E	1472619
	150					EPCO-40-150-12.7P-ST-E	1472621
	200					EPCO-40-200-12.7P-ST-E	1472623
	300					EPCO-40-300-12.7P-ST-E	1472625

FESTO

2

EPCO

Accessories

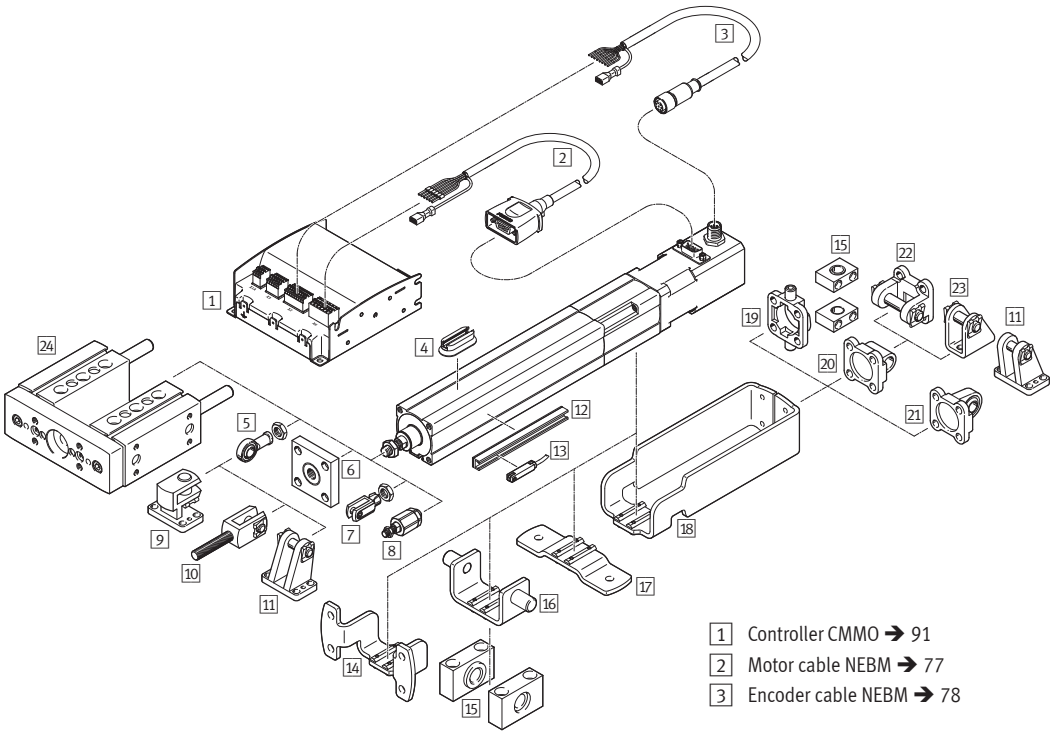

1 Controller CMMO ➔ 91
2 Motor cable NEBM ➔ 77
3 Encoder cable NEBM ➔ 78
4 Mounting kit CRSMB ➔ crsmb
5 Rod eye SGS ➔ 56
6 Coupling piece KSG ➔ ksg
7 Rod clevis SG ➔ 56
8 Self-aligning rod coupler FK ➔ 56
9 Right-angle clevis foot LQG ➔ 56
10 Rod clevis SGA ➔ 56
11 Clevis foot LBG ➔ 56
12 Sensor rail SAMH ➔ samh
13 Proximity sensor SME-/SMT-8 ➔ sme-8, SME- 8M ➔ 166
14 Flange mounting EAHH ➔ 56
15 Trunnion support LNZG ➔ 56
16 Swivel mounting EAHS ➔ 56
17 Foot mounting EAHF ➔ 56
18 Adapter kit EAHA ➔ 56
19 Trunnion flange ZNCF ➔ 56
20 Swivel flange SNCL ➔ 56
21 Swivel flange SNCS ➔ 56
22 Swivel flange SNCB ➔ 56
23 Clevis foot LBN ➔ 56
24 Guide unit EAGF-P1 ➔ 56

5 Rod eye SGS

For	Type	Part no.
16	SGS-M6	9254
25	SGS-M8	9255
40	SGS-M10x1.25	9261

7 Rod eye SG

For	Type	Part no.
16	SG-M6	3110
25	SG-M8	3111
40	SG-M10x1,25	6144

8 Self-aligning rod coupler FK

For	Type	Part no.
16	FK-M6	2061
25	FK-M8	2062
40	FK-M10x1,25	6140

9 Right-angle clevis foot LQG

For	Type	Part no.
40	LQG-40	31769

10 Rod clevis SGA

For	Type	Part no.
40	SGA-M10x1,25	32954

11 Clevis foot LBG

For	Type	Part no.
40	LBG-40	31762

14 Flange mounting EAHH

For	Type	Part no.
16	EAHH-P1-16	1434906
25	EAHH-P1-25	1434907
40	EAHH-P1-40	1434908

15 Trunnion support LNZG

For	Type	Part no.
16	LNZG-16	1434912
25	LNZG-32	32959
40	LNZG-40/50	32960

16 Swivel mounting EAHS

For	Type	Part no.
16	EAHS-P1-16	1434909
25	EAHS-P1-25	1434910
40	EAHS-P1-40	1434911

17 Foot mounting EAHF

For	Type	Part no.
16	EAHF-P1-16	1434903
25	EAHF-P1-25	1434904
40	EAHF-P1-40	1434905

18 Adapter kit EAHA

For	Type	Part no.
16	EAHA-P1-16	1434900
25	EAHA-P1-25	1434901
40	EAHA-P1-40	1434902

19 Trunnion flange ZNCF

For	Type	Part no.
40	ZNCF-40	174412

20 Swivel flange SNCL

For	Type	Part no.
16	SNCL-16	537791
25	SNCL-25	537793
40	SNCL-40	174405

21 Swivel flange SNCS

For	Type	Part no.
40	SNCS-40	174398

22 Swivel flange SNCB

For	Type	Part no.
40	SNCB-40	174391

23 Clevis foot LBN

For	Type	Part no.
16	LBN-12/16	6058
25	LBN-20/25	6059
40	LBN-40	195861

24 Guide unit EAGF-P1
for fixed strokes, with recirculating ball bearing guide

Size	Stroke [mm]	Type	Part no.
16	50	EAGF-P1-KF-16-50	3192932
	100	EAGF-P1-KF-16-100	3192934
	150	EAGF-P1-KF-16-150	3192936
	200	EAGF-P1-KF-16-200	3192938
	75, 125, 175	EAGF-P1-KF-16-...	3192939

24 Guide unit EAGF-P1
for fixed strokes, with recirculating ball bearing guide

Size	Stroke [mm]	Type	Part no.
25	50	EAGF-P1-KF-25-50	3192943
	100	EAGF-P1-KF-25-100	3192945
	150	EAGF-P1-KF-25-150	3192947
	200	EAGF-P1-KF-25-200	3192949
	300	EAGF-P1-KF-25-300	3192951
	75, 125, 175, 250	EAGF-P1-KF-25-...	3192952

24 Guide unit EAGF-P1
for fixed strokes, with recirculating ball bearing guide

Size	Stroke [mm]	Type	Part no.
40	50	EAGF-P1-KF-40-50	3192955
	100	EAGF-P1-KF-40-100	3192957
	150	EAGF-P1-KF-40-150	3192959
	200	EAGF-P1-KF-40-200	3192961
	300	EAGF-P1-KF-40-300	3192963
	75, 125, 175, 250, 350, 400	EAGF-P1-KF-40-...	3192966

Electric cylinders ESBF, with spindle drive

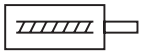

- Based on ISO 15552
- Available with ball screw (size 32 … 100) and lead screw (size 32 … 50)
- Three spindle pitches (ball screw) make it possible to select the optimal force-speed ratio
- Optional: high corrosion protection, degree of protection IP65, food-safe in certain circumstances
- High rigidity and precision (ball screw)
- Axial or parallel motor mounting

Order code – Basic design

001	002	003	004	005
ESBF	BS			…P

Legend: Mandatory entry

001	Type
ESBF	Electric cylinder

002	Drive type
BS	Ball screw

003	Size
…	32, 40, 50, 63

004	Stroke [mm]
…	100, 200, 300, 400

005	Spindle pitch [mm]
…P	5, 10, 15, 16, 20, 25

006	OO Piston rod thread type
–	Male thread

007	Degree of protection for electrics
–	Standard

008	Corrosion protection
–	Standard

009	Additional features
–	Without

010	Piston rod extension
–	Without

Product options

80, 100	Size
30 … 1500 mm	Variable stroke
32P, 40P	Spindle pitch 32 mm, 40 mm
2.5 , 3, 4, 15, 32, 40 mm	Spindle pitch
F	Piston rod with female thread
S1	Degree of protection for electrics IP65
R3	High corrosion protection
F1	Additional feature: food-safe in accordance with supplementary material information
…E	Piston rod extension 1 … 200 mm

Ordering – Product options

Configurable product

This product and all its product options can be ordered using the configurator.

The configurator can be found under Products at
➔ **www.festo.com/catalogue/…**

Enter the type or the configuration part number in the search field.

FESTO

2

ESBF

Ordering data – Basic design

005 Spindle pitch [mm]	003 Stroke [mm]	002 Size 32 Type	32 Part no.	40 Type	40 Part no.	50 Type	50 Part no.	63 Type	63 Part no.
5P	100	ESBF-BS-32-100-5P	8022562	ESBF-BS-40-100-5P	8022574	ESBF-BS-50-100-5P	8022590	ESBF-BS-63-100-5P	574093
	200	ESBF-BS-32-200-5P	2215384	ESBF-BS-40-200-5P	2215385	ESBF-BS-50-200-5P	2215386	ESBF-BS-63-200-5P	1347390
	300	ESBF-BS-32-300-5P	8022563	ESBF-BS-40-300-5P	8022575	ESBF-BS-50-300-5P	8022591	ESBF-BS-63-300-5P	574094
	400	ESBF-BS-32-400-5P	8022564	ESBF-BS-40-400-5P	8022576	ESBF-BS-50-400-5P	8022592	ESBF-BS-63-400-5P	574095
10P	100	ESBF-BS-32-100-10P	8022565	ESBF-BS-40-100-10P	8022577	ESBF-BS-50-100-10P	8022593	ESBF-BS-63-100-10P	574096
	200	ESBF-BS-32-200-10P	8022566	ESBF-BS-40-200-10P	8022578	ESBF-BS-50-200-10P	8022594	ESBF-BS-63-200-10P	574097
	300	ESBF-BS-32-300-10P	8022567	ESBF-BS-40-300-10P	8022579	ESBF-BS-50-300-10P	8022595	ESBF-BS-63-300-10P	574098
	400	ESBF-BS-32-400-10P	8022568	ESBF-BS-40-400-10P	8022580	ESBF-BS-50-400-10P	8022596	ESBF-BS-63-400-10P	574099
16P	100			ESBF-BS-40-100-16P	8022581				
	200			ESBF-BS-40-200-16P	8022582				
	300			ESBF-BS-40-300-16P	8022583				
	400			ESBF-BS-40-400-16P	8022584				
20P	100					ESBF-BS-50-100-20P	8022597		
	200					ESBF-BS-50-200-20P	8022598		
	300					ESBF-BS-50-300-20P	8022599		
	400					ESBF-BS-50-400-20P	8022600		
25P	100							ESBF-BS-63-100-25P	574100
	200							ESBF-BS-63-200-25P	574101
	300							ESBF-BS-63-300-25P	574102
	400							ESBF-BS-63-400-25P	574103

Accessories

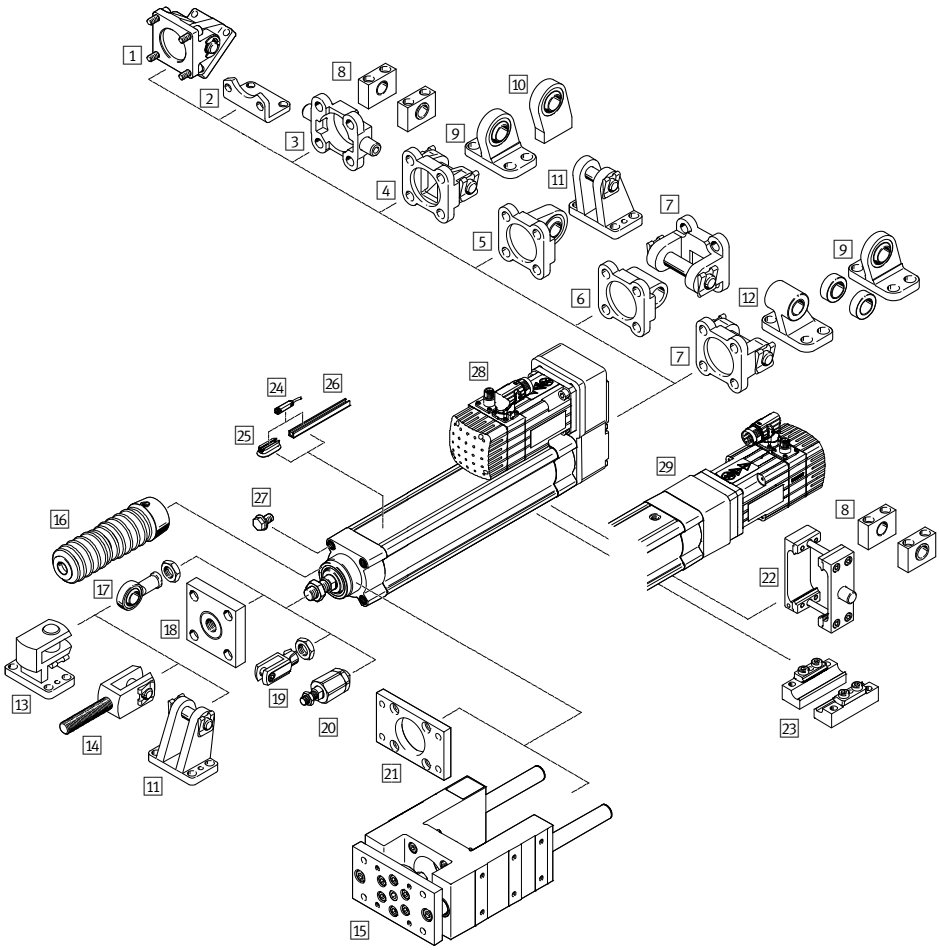

1 Swivel flange DAMS → 59
2 Foot mounting HNC → 59
3 Trunnion flange ZNCF → 59
4 Swivel flange SNC → 59
5 Swivel flange SNCS → 59
6 Swivel flange SNCL → 59
7 Swivel flange SNCB → 59
8 Trunnion support LNZG → 59
9 Clevis foot LSN/LSNG → 59
10 Clevis foot LSNSG → 59
11 Clevis foot LBG → 59
12 Clevis foot LNG → 59
13 Right-angle clevis foot LQG → 59
14 Rod clevis SGA → 59
15 Guide unit EAGF-V2 → 59
16 Bellows kit EADB → eadb
17 Rod eye SGS → 60
18 Coupling piece KSZ → 60
19 Rod clevis SG → 60
20 Self-aligning rod coupler FK → 60
21 Flange mounting EAHH → 60
22 Trunnion mounting kit DAMT → 60
23 Profile mounting EAHF-...-P → 60
24 Proximity sensor SME-/SMT-8M → 166
25 Mounting kit CRSMB → 60
26 Sensor rail SAMH → 60
27 Plug screw DAMD-PS → 60
28 Parallel kit EAMM-U → 60
29 Axial kit EAMM-A → 60

FESTO

Accessories

1 Swivel flange DAMS

For	Type	Part no.
40	DAMS-K-V1-40-V-R3	2787470
50	DAMS-K-V1-50-V-R3	2787651
63	DAMS-K-V1-63-V-R3	1555443

2 Foot mounting HNC

For	Type	Part no.
32	HNC-32	174369
40	HNC-40	174370
50	HNC-50	174371
63	HNC-63	174372

3 Trunnion flange ZNCF

For	Type	Part no.
32	ZNCF-32	174411
40	ZNCF-40	174412
50	ZNCF-50	174413
63	ZNCF-63	174414

4 Swivel flange SNC

For	Type	Part no.
32	SNC-32	174383
40	SNC-40	174384
50	SNC-50	174385
63	SNC-63	174386

5 Swivel flange SNCS

For	Type	Part no.
32	SNCS-32	174397
40	SNCS-40	174398
50	SNCS-50	174399
63	SNCS-63	174400

6 Swivel flange SNCL

For	Type	Part no.
32	SNCL-32	174404
40	SNCL-40	174405
50	SNCL-50	174406
63	SNCL-63	174407

7 Swivel flange SNCB

For	Type	Part no.
32	SNCB-32	174390
40	SNCB-40	174391
50	SNCB-50	174392
63	SNCB-63	174393

8 Trunnion support LNZG

For	Type	Part no.
32	LNZG-32	32959
40	LNZG-40/50	32960
50	LNZG-40/50	32960
63	LNZG-63/80	32961

9 Clevis foot LSN

For	Type	Part no.
32	LSN-32	5561
40	LSN-40	5562
50	LSN-50	5563
63	LSN-63	5564

9 Clevis foot LSNG

For	Type	Part no.
32	LSNG-32	31740
40	LSNG-40	31741
50	LSNG-50	31742
63	LSNG-63	31743

10 Clevis foot LSNSG

For	Type	Part no.
32	LSNSG-32	31747
40	LSNSG-40	31748
50	LSNSG-50	31749
63	LSNSG-63	31750

11 Clevis foot LBG

For	Type	Part no.
32	LBG-32	31761
40	LBG-40	31762
50	LBG-50	31763
63	LBG-63	31764

12 Clevis foot LNG

For	Type	Part no.
32	LNG-32	33890
40	LNG-40	33891
50	LNG-50	33892
63	LNG-63	33893

13 Right-angle clevis foot LQG

For	Type	Part no.
32	LQG-32	31768
40	LQG-40	31769
50	LQG-50	31770
63	LQG-63	31771

14 Rod clevis SGA

For	Type	Part no.
32	SGA-M10x1,25	32954
40	SGA-M12x1,25	10767
50	SGA-M16x1,5	10768
63	SGA-M16x1,5	10768

15 Guide unit EAGF-V2
for fixed strokes, with recirculating ball bearing guide

Size	Stroke [mm]	Type	Part no.
32	100	EAGF-V2-KF-32-100	2782679
	200	EAGF-V2-KF-32-200	2782818
	320	EAGF-V2-KF-32-320	2782885
	400	EAGF-V2-KF-32-400	2782923
40	100	EAGF-V2-KF-40-100	2782939
	200	EAGF-V2-KF-40-200	2782976
	320	EAGF-V2-KF-40-320	2783047
	400	EAGF-V2-KF-40-400	2783080

15 Guide unit EAGF-V2
for fixed strokes, with recirculating ball bearing guide

Size	Stroke [mm]	Type	Part no.
50	100	EAGF-V2-KF-50-100	2783639
	200	EAGF-V2-KF-50-200	2784152
	320	EAGF-V2-KF-50-320	2784164
	400	EAGF-V2-KF-50-400	2784184
63	100	EAGF-V2-KF-63-100	1725842
	200	EAGF-V2-KF-63-200	1725843
	320	EAGF-V2-KF-63-320	1725844
	400	EAGF-V2-KF-63-400	1725845

FESTO

2

ESBF

Accessories

17 Rod eye SGS

For	Type	Part no.
32	SGS-M10x1,25	9261
40	SGS-M12x1,25	9262
50	SGS-M16x1,5	9263
63	SGS-M16x1,5	9263

18 Coupling piece KSZ

For	Type	Part no.
32	KSZ-M10x1,25	36125
40	KSZ-M12x1,25	36126
50	KSZ-M16x1,5	36127
63	KSZ-M16x1,5	36127

19 Rod clevis SG

For	Type	Part no.
32	SG-M10x1,25	6144
40	SG-M12x1,25	6145
50	SG-M16x1,5	6146
63	SG-M16x1,5	6146

20 Self-aligning rod coupler FK

For	Type	Part no.
32	FK-M10x1,25	6140
40	FK-M12x1,25	6141
50	FK-M16x1,5	6142
63	FK-M16x1,5	6142

21 Flange mounting EAHH

For	Type	Part no.
32	EAHH-V2-32-R1	2827587
40	EAHH-V2-40-R1	2827588
50	EAHH-V2-50-R1	2827589
63	EAHH-V2-63-R1	1502305

22 Trunnion mounting kit DAMT

For	Type	Part no.
32	DAMT-V1-32-A	2213233
40	DAMT-V1-40-A	2214899
50	DAMT-V1-50-A	2214909
63	DAMT-V1-63-A	2214971

23 Profile mounting EAHF

For	Type	Part no.
32	EAHF-V2-32/40-P	2838839
40	EAHF-V2-32/40-P	2838839
50	EAHF-V2-50/63-P	1547781
63	EAHF-V2-50/63-P	1547781

25 Mounting kit CRSMB

For	Type	Part no.
32	CRSMB-8-32/100	525565
40		
50		
63		

26 Sensor rail SAMH

For	Type	Part no.
32	SAMH-N8-SR-50[1]	1600093
40	SAMH-N8-SR-100[2]	1600118
50		
63		

1) Length: 50 mm
2) Length: 100 mm

27 Plug screw DAMD

For	Type	Part no.
32	DAMD-PS-M6-12-R1	1355016
40		
50	DAMD-PS-M8-16-R1	650121
63		

28 Parallel kit EAMM-U

For	With motor	Type	Part no.
In combination with stepper motor EMMS-ST			
32	EMMS-ST-42-...	EAMM-U-50-D32-42 A-78	1201607
32	EMMS-ST-57-...	EAMM-U-60-D32-57 A-91	1210419
40	EMMS-ST-57-...	EAMM-U-60-D40-57 A-91	1210442
40	EMMS-ST-87-...	EAMM-U-86-D40-87 A-102	1215802
50	EMMS-ST-87-...	EAMM-U-86-D50-87 A-102	2802708
63	EMMS-ST-87-...	EAMM-U-86-D60-87 A-102	1215784
In combination with servo motor EMME-AS, EMMS-AS			
32	EMME-AS-40-...	EAMM-U-50-D32-40P-78	2153283
32	EMME-AS-60-...	EAMM-U-70-D32-60P-96	2619586
40	EMME-AS-60-...	EAMM-U-70-D40-60P-96	2617488
40	EMME-AS-80-...	EAMM-U-86-D40-80P-102	2802441
50	EMME-AS-100-... EMMS-AS-100-...	EAMM-U-110-D50-100 A-120	2799424
50	EMME-AS-80-...	EAMM-U-86-D50-80P-102	2803053
63	EMME-AS-100-... EMMS-AS-100-...	EAMM-U-110-D60-100 A-120	1202436
63	EMME-AS-80-...	EAMM-U-86-D60-80P-102	2155875

29 Axial kit EAMM-A

For	With motor	Type	Part no.
In combination with stepper motor EMMS-ST			
32	EMMS-ST-42-...	EAMM-A-D32-42 A	543148
32	EMMS-ST-57-...	EAMM-A-D32-57 A	550980
40	EMMS-ST-57-...	EAMM-A-D40-57 A	543154
40	EMMS-ST-87-...	EAMM-A-D40-87 A	550982
50	EMMS-ST-87-...	EAMM-A-D50-87 A	2733781
63	EMMS-ST-87-...	EAMM-A-D60-87 A	543162
In combination with servo motor EMME-AS, EMMS-AS			
32	EMME-AS-60-...	EAMM-A-D32-60P	1956054
32	EMME-AS-40-...	EAMM-A-D32-40P	1976465
40	EMME-AS-60-...	EAMM-A-D40-60P	1977000
50	EMME-AS-100-... EMMS-AS-100-...	EAMM-A-D50-100 A	2733784
50	EMME-AS-80-...	EAMM-A-D50-80P	2733785
63	EMME-AS-80-...	EAMM-A-D60-80P	1977073
63	EMME-AS-100-... EMMS-AS-100-...	EAMM-A-D60-100 A	550983

Toothed belt axes EGC-TB-KF, with recirculating ball bearing guide

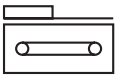

- Recirculating ball bearing guide for high loads and torques
- Optionally with clamping unit, at one or both ends
- Profile with optimised rigidity and load capacity
- Comprehensive range of mounting accessories for multi-axis combinations
- Precision: the slide position can be sensed directly using the optional displacement encoder

Order code

001	002	003	004	005	006	007	008	009	010	011	012	013	014
EGC	–	–	TB	KF	...H	–	–	–	–	–	–	+	ZUB –

001	Type
EGC	Linear axis

002	Size
...	50, 70, 80, 120, 185

003	Stroke [mm]
...	50 ... 8500

004	Function
TB	Toothed belt

005	Guide
KF	Recirculating ball bearing guide

006	Stroke reserve [mm]
...H	0 ... 999 (0 = no stroke reserve)

007	Slide
GK	Standard slide
GQ	Extended slide, protected
GP	Standard slide, protected
GV	Extended slide

008	Additional slide on left
–	Without
KL	Additional slide, standard, on left

009	Additional slide on right
–	Without
KR	Additional slide, standard, on right

010	Lubrication function
–	Without
C	Lubrication adapter

011	Displacement encoder
–	Without
M1	With displacement encoder, incremental, resolution 2.5 µm
M2	With displacement encoder, incremental, resolution 10 µm

012	Clamping unit
–	None
1HL	1-channel holding function, left
1HR	1-channel holding function, right
2H	2-channel holding function

013	Type of control
–	Without
PN	Pneumatically actuated

014	Accessories
ZUB –	Accessories enclosed separately
F	Foot mounting (1 piece)
...M	Profile mounting (1 ... 10 pieces)
...B	Mounting slot cover (1 ... 50 pieces)
...S	Sensor slot cover (1 ... 50 pieces)
...Y	Slot nut for mounting slot (1 ... 99 pieces)
...O	Proximity sensor (SIES), N/O contact with cable, 2.5 m (1 ... 99 pieces)
...P	Proximity sensor (SIES), N/C contact with cable, 2.5 m (1 ... 99 pieces)
...W	Proximity sensor (SIES), N/O contact with plug M8, 2.5 m (1 ... 99 pieces)
...R	Proximity sensor (SIES), N/C contact with plug M8, 2.5 m (1 ... 99 pieces)
...V	Connecting cable 2.5 m, M8, 3-wire (1 ... 99 pieces)
...K	Drive shaft (1 ... 4 pieces)
...CL	Cable clip (10, 20, 30, 40, 50, 60, 70, 80, 90 pieces)
-DN	Express waiver – no operating instructions to be included

Legend: Mandatory entry Optional entry

Ordering data – Product options

Configurable product

This product and all its product options can be ordered using the configurator.

The configurator can be found under Products at
➔ **www.festo.com/catalogue/...**

Enter the type or the configuration part number in the search field.

Toothed belt axes EGC-TB-KF, with recirculating ball bearing guide

FESTO

Configuration part no.		
Size	Type	Part no.
50	EGC-50-...-TB-KF-0H-GK	556812
70	EGC-70-...-TB-KF-0H-...	556813
80	EGC-80-...-TB-KF-0H-...	556814
120	EGC-120-...-TB-KF-0H-...	556815
185	EGC-185-...-TB-KF-0H-...	556817

Ordering – Basic design

003 **Stroke [mm]**	002 **Size**					
	70		80		120	
	004 **Toothed belt TB** – 005 **Recirculating ball bearing guide KF** – 006 **No stroke reserve 0H** – 007 **Standard slide GK**					
	Type	Part no.	Type	Part no.	Type	Part no.
300	EGC-70-300-TB-KF-0H-GK	3012492				
400	EGC-70-400-TB-KF-0H-GK	3012493	EGC-80-400-TB-KF-0H-GK	575832	EGC-120-400-TB-KF-0H-GK	3013364
500	EGC-70-500-TB-KF-0H-GK	3012494	EGC-80-500-TB-KF-0H-GK	3013354	EGC-120-500-TB-KF-0H-GK	3013365
600	EGC-70-600-TB-KF-0H-GK	3012495	EGC-80-600-TB-KF-0H-GK	3013355	EGC-120-600-TB-KF-0H-GK	3013366
800	EGC-70-800-TB-KF-0H-GK	3012496	EGC-80-800-TB-KF-0H-GK	3013356	EGC-120-800-TB-KF-0H-GK	3013367
1000	EGC-70-1000-TB-KF-0H-GK	3012497	EGC-80-1000-TB-KF-0H-GK	3013357	EGC-120-1000-TB-KF-0H-GK	3013368
1200	EGC-70-1200-TB-KF-0H-GK	3012498	EGC-80-1200-TB-KF-0H-GK	3013359	EGC-120-1200-TB-KF-0H-GK	3013369
1500					EGC-120-1500-TB-KF-0H-GK	3013370

Accessories

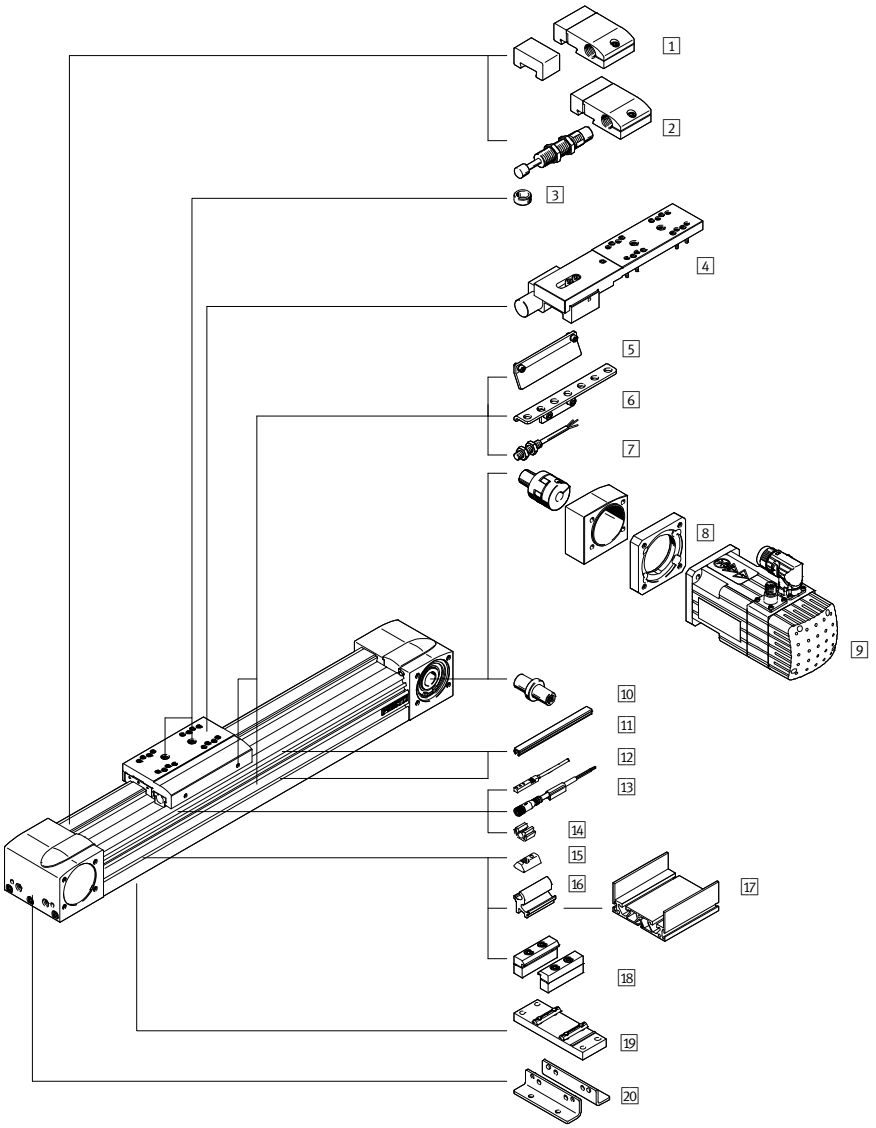

1 Emergency buffer NPE/shock absorber retainer KYE → egc-tb
2 Shock absorber YSRW/shock absorber retainer KYE → egc-tb
3 Centring pin/sleeve ZBS/ZBH → 63
4 Clamping unit 1H-P...N, 2H-PN → egc-tb
5 Switch lug SF-EGC → 63
6 Sensor bracket HWS-EGC → hws-egc
7 Inductive proximity sensor SIEN → 63
8 Axial kit EAMM-A → 63
9 Motor EMMS/EMME → 87/85
10 Drive shaft EAMB → eamb
11 Slot cover ABP/ABP-S → abp
12 Inductive proximity sensor SIES → 63
13 Connecting cable NEBU → 63
14 Clip SMBK → smbk
15 Slot nut NST → 63
16 Adapter kit DHAM → egc-tb
17 Support profile HMIA → egc-tb
18 Profile mounting MUE → 63
19 Central support EAHF-L5 → 63
20 Foot mounting HPE → 63

FESTO

Accessories

3 Centring pin/sleeve ZBS/ZBH

For size	Type	Part no.
50, 70	ZBS-5[1)2)]	150928
80, 120, 185	ZBH-9[1)2)]	150927

1) Packaging unit 10 pieces.
2) 2 centring pins/sleeves included in the scope of delivery of the axis.

5 Switch lug SF-EGC[3)]

For size	Type	Part no.
50	SF-EGC-1-50	558046
70	SF-EGC-1-70	558047
80	SF-EGC-1-80	558048
120	SF-EGC-1-120	558049
185	SF-EGC-1-185	558051

3) For sensing via proximity sensor SIES-8M.

8 Axial kit EAMM-A

For	9 Motor EMMS, EMME Gear unit EMGA	Type	Part no.
In combination with stepper motor EMMS-ST			
50	EMMS-ST-57-...	EAMM-A-L27-57 A	560678
70	EMMS-ST-57-...	EAMM-A-L38-57 A	560679
70	EMMS-ST-87-...	EAMM-A-L38-87 A	560680
80	EMMS-ST-87-...	EAMM-A-L48-87 A	560683
In combination with stepper motor EMMS-ST and gear unit EMGA			
50	EMMS-ST-42-... EMGA-40-P-G...-SST-42	EAMM-A-L27-40G	557974
70	EMMS-ST-57-... EMGA-60-P-G...-SST-57	EAMM-A-L38-60G	557978
120	EMMS-ST-87-... EMGA-80-P-G...-SST-87	EAMM-A-L62-80G	557989
In combination with servo motor EMME-AS			
70	EMME-AS-60-...	EAMM-A-L38-60P	2037246
80	EMME-AS-80-...	EAMM-A-L48-80P	2042616
120	EMME-AS-100-...	EAMM-A-L62-100 A	557988
In combination with servo motor EMMS-AS and gear unit EMGA			
50	EMME-AS-40-... EMGA-40-P-G...-EAS-40	EAMM-A-L27-40G	557974
	EMMS-AS-40-... EMGA-40-P-G...-SAS-40		
70	EMMS-AS-55-... EMGA-60-P-G...-SAS-55	EAMM-A-L38-60G	557978
70	EMMS-AS-70-... EMGA-60-P-G...-SAS-70	EAMM-A-L48-60G	557983
120	EMMS-AS-70-... EMGA-80-P-G...-SAS-70	EAMM-A-L62-80G	557989
	EMME-AS-80-... EMGA-80-P-G...-EAS-80		
	EMME-AS-100-... EMGA-80-P-G...-SAS-100		
	EMMS-AS-100-... EMGA-80-P-G...-SAS-100		
185	EMME-AS-100-... EMGA-120-P-G...-SAS-100	EAMM-A-L95-120G-G2	3659941
	EMMS-AS-100-... EMGA-120-P-G...-SAS-100		
	EMMS-AS-140-... EMGA-120-P-G...-SAS-140		

7 Inductive proximity sensor SIEN

For size	Description	Type	Part no.
N/O contact, M8			
50, 70, 80, 120, 185	PNP, cable	SIEN-M8B-PS-K-L	150386
	PNP, plug	SIEN-M8B-PS-K-L	150387
N/C contact, M8			
50, 70, 80, 120, 185	PNP, cable	SIEN-M8B-PO-K-L	150390
	PNP, plug	SIEN-M8B-PO-K-L	150391

12 Inductive proximity sensor SIES for T-slot

For size	Description	Type	Part no.
N/O contact with cable			
50, 70, 80, 120, 185	PNP, cable, 7.5 m	SIES-8M-PS-24 V-K-7,5-OE	551386
	PNP, plug, 0.3 m	SIES-8M-PS-24 V-K-0,3-M8D	551387
	NPN, cable, 7.5 m	SIES-8M-NS-24 V-K-7,5-OE	551396
	NPN, plug, 0.3 m	SIES-8M-NS-24 V-K-0,3-M8D	551397
N/C contact with cable			
50, 70, 80, 120, 185	PNP, cable, 7.5 m	SIES-8M-PO-24 V-K-7,5-OE	551391
	PNP, plug, 0.3 m	SIES-8M-PO-24 V-K-0,3-M8D	551392
	NPN, cable, 7.5 m	SIES-8M-NO-24 V-K-7,5-OE	551401
	NPN, plug, 0.3 m	SIES-8M-NO-24 V-K-0,3-M8D	551402

13 Connecting cable NEBU

For size	Description	Type	Part no.
M8x1, 3-pin, with cable			
50, 70, 80, 120, 185	Straight socket, 2.5 m	NEBU-M8G3-K-2.5-LE3	541333
	Straight socket, 5 m	NEBU-M8G3-K-5-LE3	541334
50, 70, 80, 120, 185	Angled socket, 2.5 m	NEBU-M8W3-K-2.5-LE3	541338
	Angled socket, 5 m	NEBU-M8W3-K-5-LE3	541341

15 Slot nut NST

For size	Type	Part no.
50	NST-3-M3	558045
70, 80	NST-5-M5	150914
120, 185	NST-8-M6	150915

18 Profile mounting MUE

For size	Type	Part no.
50	MUE-50	558042
70, 80	MUE-70/80	558043
120, 185	MUE-120/185	558044

19 Central support EAHF-L5

For size	Type	Part no.
70	EAHF-L5-70-P	2349256
80	EAHF-L5-80-P	3535188
120	EAHF-L5-120-P	2410274

20 Foot mounting HPE

For size	Type	Part no.
50	HPE-50	558320
70	HPE-70	558321
80	HPE-80	558322
120	HPE-120	558323
185	HPE-185	558325

Mini-Slides EGSC-BS

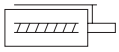

- Precise guide and ball screw
- Compact dimensions
- Flexible motor mounting
- The toothed belt axes, spindle axes ELGC and mini slides EGSC form a scalable modular system for compact automation
- Selected types in accordance with ATEX directive for potentially explosive atmospheres
  → **www.festo.com/en/ex**

Order code

001	002	003	004	005	006
EGSC	BS	KF			

Legend: Mandatory entry

001	Typ
EGSC	Mini-Slide

002	Drive function
BS	Ball screw

003	Guide
KF	Recirculating ball bearing guide

004	Size
...	25, 32, 45, 60

005	Stroke [mm]
...	25, 50, 75, 100, 125, 150, 200

006	Spindle pitch [mm/U]
6P	6
8P	8
10P	10
12P	12

Ordering

004 Size	006 Spindle pitch [mm/U]	005 Stroke [mm]	Type	Part no.
25	6	25	EGSC-BS-KF-25-25-6P	8048310
		50	EGSC-BS-KF-25-50-6P	8048311
		75	EGSC-BS-KF-25-75-6P	8061280
		150	EGSC-BS-KF-25-150-6P	4454365
32	8	25	EGSC-BS-KF-32-25-8P	8048306
		50	EGSC-BS-KF-32-50-8P	8048307
		75	EGSC-BS-KF-32-75-8P	8048308
		100	EGSC-BS-KF-32-100-8P	4356032
		150	EGSC-BS-KF-32-150-8P	8061281
		200	EGSC-BS-KF-32-200-8P	8061282

004 Size	006 Spindle pitch [mm/U]	005 Stroke [mm]	Type	Part no.
45	10	25	EGSC-BS-KF-45-25-10P	8048300
		50	EGSC-BS-KF-45-50-10P	8048301
		75	EGSC-BS-KF-45-75-10P	8048302
		100	EGSC-BS-KF-45-100-10P	4022926
		125	EGSC-BS-KF-45-125-10P	8048303
		150	EGSC-BS-KF-45-150-10P	8048304
60	12	50	EGSC-BS-KF-60-50-12P	8048362
		75	EGSC-BS-KF-60-75-12P	8048363
		100	EGSC-BS-KF-60-100-12P	4356469
		125	EGSC-BS-KF-60-125-12P	8048364
		150	EGSC-BS-KF-60-150-12P	8048365
		200	EGSC-BS-KF-60-200-12P	8048366

FESTO

Accessories

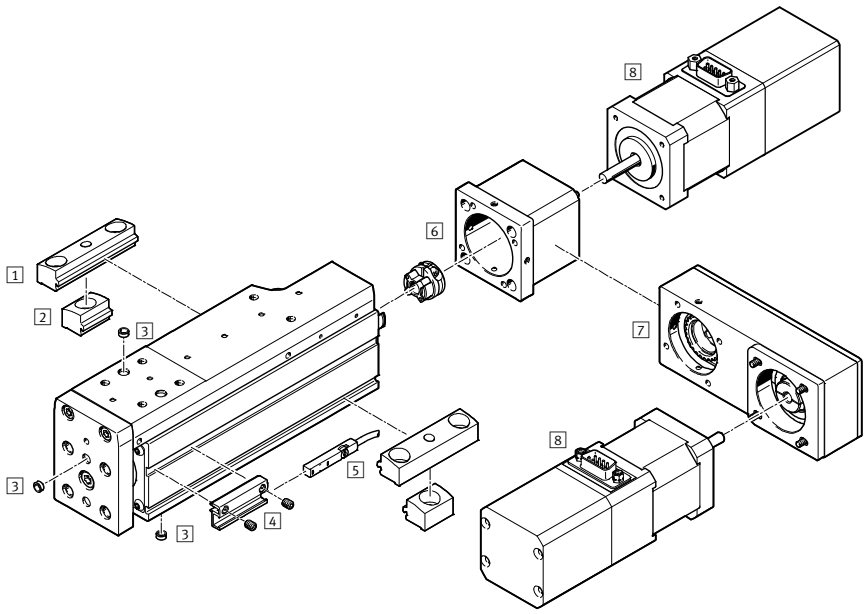

1 Profile mounting EAHF-L2-...-P
➔ eahf
2 Profile mounting EAHF-L2-...-P-S
➔ eahf
3 Centring pin/sleeve ZBS, ZHB ➔ zbs
4 Sensor bracket EAPM-L2 ➔ eapm
5 Proximity sensor SMT-8M ➔ smt-8
6 Axial kit EAMM-A ➔ eamm
7 Parallel kit EAMM-U ➔ eamm
8 Motors EMME-AS, EMMS-ST
➔ emme

Spindle axes EGSC-BS-KF, with recirculating ball bearing guide

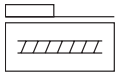

- Internal guide and ball screw
- Space-saving position sensing
- Flexible motor mounting
- The toothed belt axes, spindle axes ELGC and mini slides EGSC form a scalable modular system for compact automation
- Selected types in accordance with ATEX directive for potentially explosive atmospheres
  → **www.festo.com/en/ex**

Order code

001		002		003		004		005		006
ELGC	–	BS	–	KF	–		–		–	

Legend: [ ] Mandatory entry

001	Type
ELGC	Spindle axis

002	Drive function
BS	Ball screw

003	Guide
KF	Recirculating ball bearing guide

004	Size
...	32, 45, 60, 80

005	Stroke [mm]
...	100, 200, 300, 400, 500, 600, 800, 1000

006	Spindle pitch [mm/U]
8P	8
10P	10
12P	12
16P	16

Ordering

004 Size	006 Spindle pitch [mm/U]	005 Stroke [mm]	Type	Part no.
32	8	100	ELGC-BS-KF-32-100-8P	8061477
		200	ELGC-BS-KF-32-200-8P	8061478
		300	ELGC-BS-KF-32-300-8P	8061479
		400	ELGC-BS-KF-32-400-8P	8061480
		500	ELGC-BS-KF-32-500-8P	8061481
		600	ELGC-BS-KF-32-600-8P	8061482
		800	ELGC-BS-KF-32-800-8P	8061483
45	10	100	ELGC-BS-KF-45-100-10P	8061484
		200	ELGC-BS-KF-45-200-10P	8061485
		300	ELGC-BS-KF-45-300-10P	8061486
		400	ELGC-BS-KF-45-400-10P	8061487
		500	ELGC-BS-KF-45-500-10P	8061488
		600	ELGC-BS-KF-45-600-10P	8061489
		800	ELGC-BS-KF-45-800-10P	8061490

004 Size	006 Spindle pitch [mm/U]	005 Stroke [mm]	Type	Part no.
60	12	100	ELGC-BS-KF-60-100-12P	8061491
		200	ELGC-BS-KF-60-200-12P	8061492
		300	ELGC-BS-KF-60-300-12P	8061493
		400	ELGC-BS-KF-60-400-12P	8061494
		500	ELGC-BS-KF-60-500-12P	8061495
		600	ELGC-BS-KF-60-600-12P	8061496
		800	ELGC-BS-KF-60-800-12P	8061497
80	16	100	ELGC-BS-KF-80-100-16P	8061498
		200	ELGC-BS-KF-80-200-16P	8061499
		300	ELGC-BS-KF-80-300-16P	8061500
		400	ELGC-BS-KF-80-400-16P	8061501
		500	ELGC-BS-KF-80-500-16P	8061502
		600	ELGC-BS-KF-80-600-16P	8061503
		800	ELGC-BS-KF-80-800-16P	8061504
		1000	ELGC-BS-KF-80-1000-16P	8061505

FESTO

Accessories

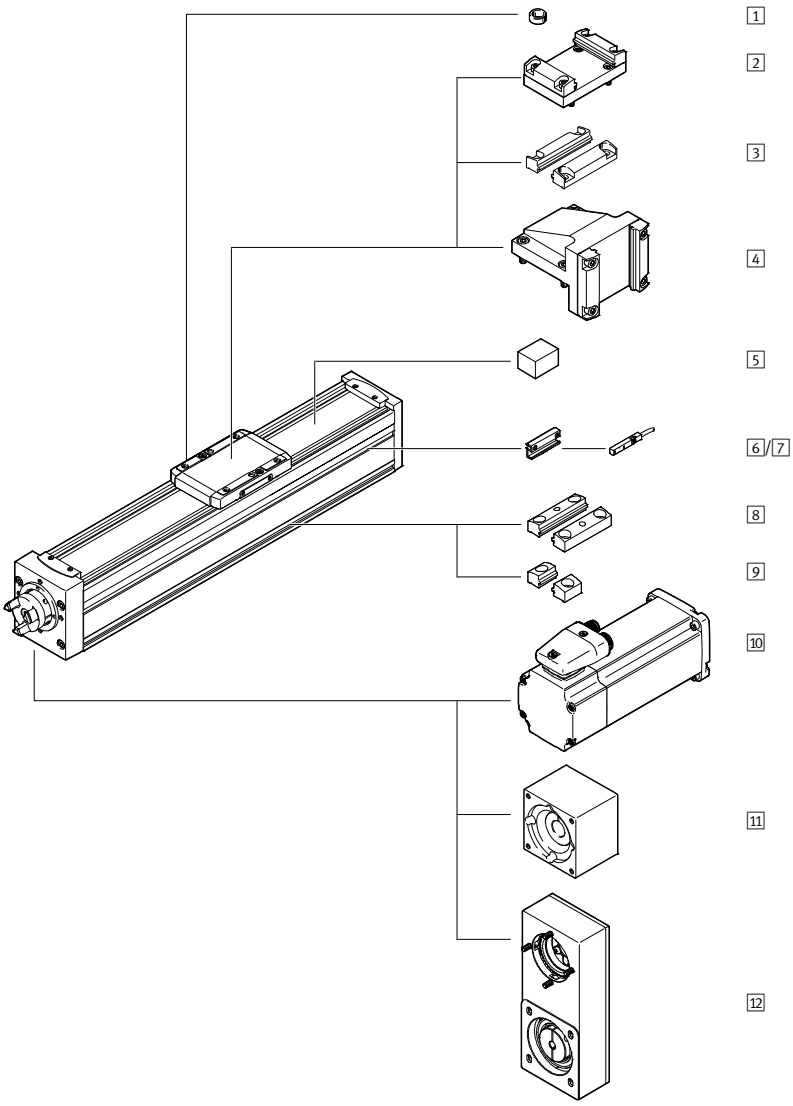

1 Centring pin/sleeve ZBS, ZHB ➔ zbs
2 Adapter kit EHAA-D-L2 ➔ ehaa
3 Profile mounting EAHF-L2-...-P-D... ➔ eahf
4 Angular kit EHAA-D-L2-...-AP ➔ eapm
5 Clamping element EADT-S-L5-32 ➔ eadt
6 Sensor bracket EAPM-L2-SH ➔ eapm
7 Proximity sensor SMT-8M ➔ smt-8
8 Profile mounting EAHF-L2-...-P ➔ eahf
9 Profile mounting EAHF-L2-...-P-S ➔ eahf
10 Motors EMME-AS, EMMS-ST ➔ emme
11 Axial kit EAMM-A ➔ eamm
12 Parallel kit EAMM-U ➔ eamm

Toothed belt axes ELGC-TB-KF, with recirculating ball bearing guide

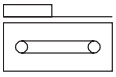

- Internal guide and toothed belt
- Precise and resilient guide
- Flexible motor mounting
- The toothed belt axes, spindle axes ELGC and mini slides EGSC form a scalable modular system for compact automation
- Selected types in accordance with ATEX directive for potentially explosive atmospheres
  → **www.festo.com/en/ex**

Order code

001		002		003		004		005
ELGC	–	TB	–	KF	–		–	

Legend: Mandatory entry

001	Type
ELGC	Linear axis

002	Drive function
TB	Toothed belt

003	Guide
KF	Recirculating ball bearing guide

004	Baugröße
...	45, 60, 80

005	Stroke [mm]
...	200, 300, 500, 600, 800, 1000, 1200, 1500, 1800, 2000

Ordering

004 Size	005 Stroke [mm]	Type	Part no.
45	200	ELGC-TB-KF-45-200	8062768
	300	ELGC-TB-KF-45-300	8062769
	500	ELGC-TB-KF-45-500	8062770
	600	ELGC-TB-KF-45-600	8062771
	800	ELGC-TB-KF-45-800	8062772
	1000	ELGC-TB-KF-45-1000	8062773
	1200	ELGC-TB-KF-45-1200	8062774
	1500	ELGC-TB-KF-45-1500	8062775
60	200	ELGC-TB-KF-60-200	8062776
	300	ELGC-TB-KF-60-300	8062777
	500	ELGC-TB-KF-60-500	8062778
	600	ELGC-TB-KF-60-600	8062779
	800	ELGC-TB-KF-60-800	8062780
	1000	ELGC-TB-KF-60-1000	8062781
	1200	ELGC-TB-KF-60-1200	8062782
	1500	ELGC-TB-KF-60-1500	8062783
	1800	ELGC-TB-KF-60-1800	8062784
	2000	ELGC-TB-KF-60-2000	8062785

004 Size	005 Stroke [mm]	Type	Part no.
80	200	ELGC-TB-KF-80-200	8062786
	300	ELGC-TB-KF-80-300	8062787
	500	ELGC-TB-KF-80-500	8062788
	600	ELGC-TB-KF-80-600	8062789
	800	ELGC-TB-KF-80-800	8062790
	1000	ELGC-TB-KF-80-1000	8062791
	1200	ELGC-TB-KF-80-1200	8062792
	1500	ELGC-TB-KF-80-1500	8062793
	1800	ELGC-TB-KF-80-1800	8062794
	2000	ELGC-TB-KF-80-2000	8062795

FESTO

Accessories

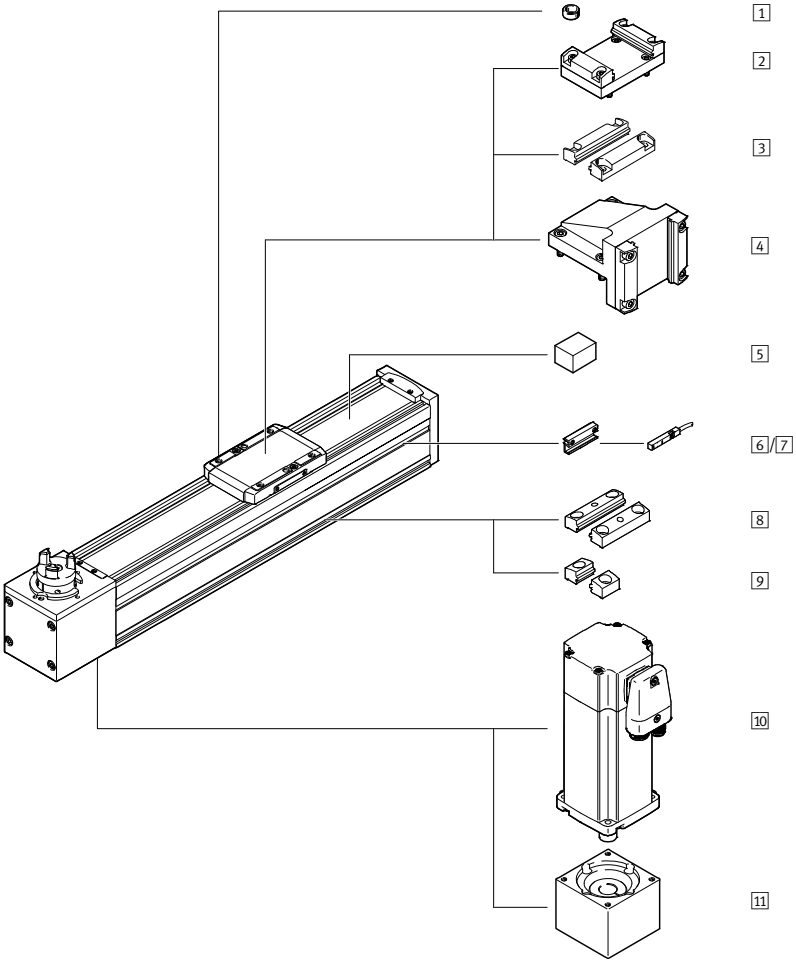

1 Centring pin/sleeve ZBS, ZHB ➔ zbs
2 Adapter kitv EHAA-D-L2 ➔ ehaa
3 Profile mounting EAHF-L2-...-P-D... ➔ eahf
4 Angular kit EHAA-D-L2-...-AP ➔ eapm
5 Clamping element EADT-S-L5-32 ➔ eadt
6 Sensor bracket EAPM-L2-SH ➔ eapm
7 Proximity sensor SMT-8M ➔ smt-8
8 Profile mounting EAHF-L2-...-P ➔ eahf
9 Profile mounting EAHF-L2-...-P-S ➔ eahf
10 Motors EMME-AS, EMMS-ST ➔ emme
11 Axial kit EAMM-A ➔ eamm

Spindle axes EGC-BS-KF, with recirculating ball bearing guide

FESTO

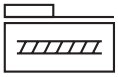

- High speeds and feed forces
- Recirculating ball bearing guide and rigid profile
- Large loads and torques

Order code – Basic design

001	002	003	004	005	006	007	008	009	010	011	012	013	014
EGC	–	–	BS	–	–	KF	OH	ML	GK	–	–	–	–

Legend: Mandatory entry; Optional entry

001	Type
EGC	Linear axis

002	Size
...	70, 80, 120

003	Stroke [mm]
...	100, 200, 300, 400, 500, 600, 800

004	Function
BS	Ball screw

005	Spindle pitch
10P	10
20P	20
25P	25

006	Spindle support
–	Without

007	Guide
KF	Recirculating ball bearing guide

008	Stroke reserve [mm]
OH	No stroke reserve

009	Motor attachment position
ML	Motor on left

010	Slide
GK	Standard slide

011	Lubrication function
–	Standard

012	Displacement encoder, incremental
–	Without

013	Clamping unit
–	Without

014	Actuation type
–	Without

Product options

185 Size
50 ... 2880 Variable stroke
S With spindle support
...H 0 ... 999 mm Stroke reserve
MR Motor on right

GQ Extended slide, protected
GP Standard slide, protected
GV Extended slide
KL Additional slide on left
KR Additional slide on right

C Lubrication adapter
M1 Displacement encoder, incremental, resolution 2.5 µm
M2 Displacement encoder, incremental, resolution 10 µm

1HL Clamping unit, 1-channel, on left
2HR Clamping unit, 1-channel, on right
2H Clamping unit, 2-channel
PN Pneumatically actuated

Ordering data – Product options

Configurable product

This product and all its product options can be ordered using the configurator.

The configurator can be found under Products at
➔ **www.festo.com/catalogue/...**

Enter the type or the configuration part number in the search field.

FESTO

Ordering – Basic design

003 Stroke [mm]	002 Size					
	70		80		120	
	004 Ball screw BS – 007 Recirculating ball bearing guide KF – 008 No stroke reserve 0H – 009 Motor on left – 010 Standard slide GK					
	Type	Part no.	Type	Part no.	Type	Part no.
	005 Spindle pitch 10P		005 Spindle pitch 10P		005 Spindle pitch 10P	
100	EGC-70-100-BS-10P-KF-0H-ML-GK	3013388	EGC-80-100-BS-10P-KF-0H-ML-GK	3013532	EGC-120-100-BS-10P-KF-0H-ML-GK	3013571
200	EGC-70-200-BS-10P-KF-0H-ML-GK	3013389	EGC-80-200-BS-10P-KF-0H-ML-GK	3013533	EGC-120-200-BS-10P-KF-0H-ML-GK	3013572
300	EGC-70-300-BS-10P-KF-0H-ML-GK	3013390	EGC-80-300-BS-10P-KF-0H-ML-GK	3013534	EGC-120-300-BS-10P-KF-0H-ML-GK	3013573
400	EGC-70-400-BS-10P-KF-0H-ML-GK	3013391	EGC-80-400-BS-10P-KF-0H-ML-GK	3013535	EGC-120-400-BS-10P-KF-0H-ML-GK	3013574
500	EGC-70-500-BS-10P-KF-0H-ML-GK	3013392	EGC-80-500-BS-10P-KF-0H-ML-GK	3013536	EGC-120-500-BS-10P-KF-0H-ML-GK	3013575
600	EGC-70-600-BS-10P-KF-0H-ML-GK	3013393	EGC-80-600-BS-10P-KF-0H-ML-GK	3013537	EGC-120-600-BS-10P-KF-0H-ML-GK	3013576
800			EGC-80-800-BS-10P-KF-0H-ML-GK	3013538	EGC-120-800-BS-10P-KF-0H-ML-GK	3013577
			005 Spindle pitch 20P		005 Spindle pitch 25P	
100			EGC-80-100-BS-20P-KF-0H-ML-GK	3013539	EGC-120-100-BS-25P-KF-0H-ML-GK	3013578
200			EGC-80-200-BS-20P-KF-0H-ML-GK	3013540	EGC-120-200-BS-25P-KF-0H-ML-GK	3013579
300			EGC-80-300-BS-20P-KF-0H-ML-GK	3013541	EGC-120-300-BS-25P-KF-0H-ML-GK	3013580
400			EGC-80-400-BS-20P-KF-0H-ML-GK	3013542	EGC-120-400-BS-25P-KF-0H-ML-GK	3013581
500			EGC-80-500-BS-20P-KF-0H-ML-GK	3013543	EGC-120-500-BS-25P-KF-0H-ML-GK	3013582
600			EGC-80-600-BS-20P-KF-0H-ML-GK	3013544	EGC-120-600-BS-25P-KF-0H-ML-GK	3013583
800			EGC-80-800-BS-20P-KF-0H-ML-GK	3013545	EGC-120-800-BS-25P-KF-0H-ML-GK	3013584

Accessories

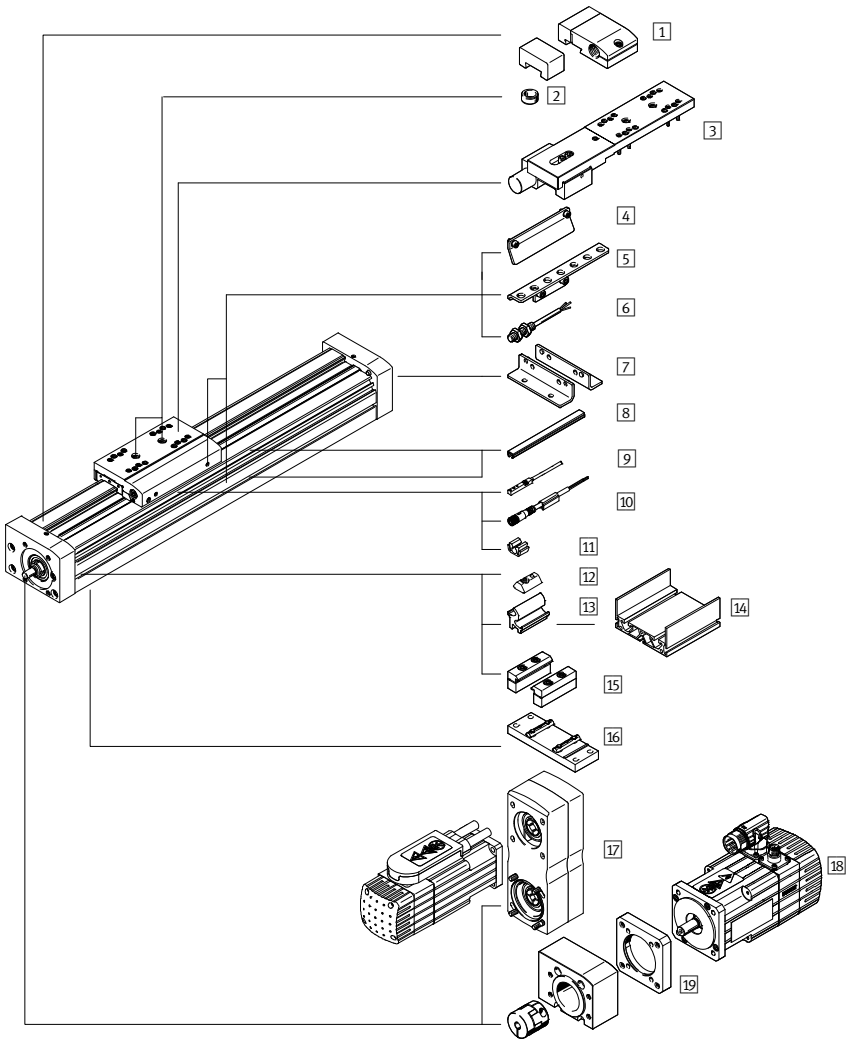

1 Emergency buffer NPE/shock absorber retainer KYE → egc-bs
2 Centring pin/sleeve ZBS/ZBH → 72
3 Clamping unit 1H...-PN, 2H-PN → egc-bs
4 Switch lug SF-EGC → 72
5 Sensor bracket HWS-EGC → egc-bs
6 Inductive proximity sensor SIEN → 63
7 Foot mounting HPE → 72
8 Slot cover ABP/ABP-S → abp
9 Inductive proximity sensor SIES → 63
10 Connecting cable NEBU → 72
11 Clip SMBK → egc-bs
12 Slot nut NST → 72
13 Adapter kit DHAM → egc-bs
14 Support profile HMIA → egc-bs
15 Profile mounting MUE → 72
16 Central support EAHF-L5 → 72
17 Parallel kit EAMM-U → 72
18 Motor EMMS → 87
19 Axial kit EAMM-A → 72

Spindle axes EGC-BS-KF, with recirculating ball bearing guide

FESTO

Accessories

2 Centring pin/sleeve ZBS/ZBH

For size	Type	Part no.
70	ZBS-5[1)2)]	150928
80, 120, 185	ZBH-9[1)2)]	150927

1) Packaging unit 10 pieces.
2) 2 centring pins/sleeves included in the scope of delivery of the axis.

4 Switch lug SF-EGC [3)]

For size	Type	Part no.
70	SF-EGC-1-70	558047
80	SF-EGC-1-80	558048
120	SF-EGC-1-120	558049
185	SF-EGC-1-185	558051

3) For sensing via proximity sensor SIES-8M.

7 Foot mounting HPE

For size	Type	Part no.
70	HPE-70	558321
80	HPE-80	558322
120	HPE-120	558323
185	HPE-185	558325

9 Inductive proximity sensor SIES for T-slot

For size	Description	Type	Part no.
N/O contact with cable			
70, 80, 120, 185	PNP, Kabel, 7,5 m	SIES-8M-PS-24 V-K-7,5-OE	551386
	PNP, Stecker, 0,3 m	SIES-8M-PS-24 V-K-0,3-M8D	551387
	NPN, Kabel, 7,5 m	SIES-8M-NS-24 V-K-7,5-OE	551396
	NPN, Stecker, 0,3 m	SIES-8M-NS-24 V-K-0,3-M8D	551397
N/C contact with cable			
70, 80, 120, 185	PNP, cable, 7.5 m	SIES-8M-PO-24 V-K-7,5-OE	551391
	PNP, plug, 0.3 m	SIES-8M-PO-24 V-K-0,3-M8D	551392
	NPN, cable, 7.5 m	SIES-8M-NO-24 V-K-7,5-OE	551401
	NPN, plug, 0.3 m	SIES-8M-NO-24 V-K-0,3-M8D	551402

10 Connecting cable NEBU

For size	Description	Type	Part no.
M8x1, 3-pin, with cable			
70, 80, 120, 185	Straight socket, 2.5 m	NEBU-M8G3-K-2.5-LE3	541333
	Straight socket, 5 m	NEBU-M8G3-K-5-LE3	541334
70, 80, 120, 185	Angled socket, 2.5 m	NEBU-M8W3-K-2.5-LE3	541338
	Angled socket, 5 m	NEBU-M8W3-K-5-LE3	541341

12 Slot nut NST

For size	Type	Part no.
70, 80	NST-5-M5	150914
120, 185	NST-8-M6	150915

15 Profile mounting MUE

For size	Type	Part no.
70, 80	MUE-70/80	558043
120, 185	MUE-120/185	558044

16 Central support EAHF-L5

For size	Type	Part no.
70	EAHF-L5-70-P	2349256
80	EAHF-L5-80-P	3535188
120	EAHF-L5-120-P	2410274

17 Parallel kit EAMM-U

For	With motor EMMS, EMME	Type	Part no.
In combination with stepper motor EMMS-ST			
70	EMMS-ST-42-...	EAMM-U-50-S38-42 A-78	1217945
70	EMMS-ST-57-...	EAMM-U-60-S38-57 A-91	1218568
80	EMMS-ST-57-...	EAMM-U-60-S48-57 A-91	1219379
80	EMMS-ST-87-...	EAMM-U-86-S48-87 A-177	1217604
120	EMMS-ST-87-...	EAMM-U-86-S62-87 A-177	1217373
In combination with servo motor EMME-AS, EMMS-AS			
40	EMME-AS-40-...	EAMM-U-50-S38-40P-78	2155239
80	EMME-AS-60-...	EAMM-U-70-S48-60P-96	2629253
120	EMME-AS-80-...	EAMM-U-86-S62-80P-177	2157004
120	EMME-AS-100-... EMMS-AS-100-...	EAMM-U-110-S62-100 A-207	1217381

19 Axial kit EAMM-A

For	With motor EMMS, EMME	Type	Part no.
In combination with stepper motor EMMS-ST			
70	EMMS-ST-57-...	EAMM-A-S38-57 A-G2	3637956
70	EMMS-ST-42-...	EAMM-A-S38-42 A-G2	3637965
80	EMMS-ST-87-...	EAMM-A-S48-87 A-G2	3637962
80	EMMS-ST-57-...	EAMM-A-S48-57 A-G2	3637963
120	EMMS-ST-87-...	EAMM-A-S62-87 A-G2	3637966
In combination with servo motor EMME-AS, EMMS-AS			
70	EMME-AS-40-...	EAMM-A-S38-40P-G2	3637972
70	EMME-AS-60-...	EAMM-A-S38-60P-G2	3637958
80	EMME-AS-60-...	EAMM-A-S48-60P-G2	3637964
120	EMME-AS-80-...	EAMM-A-S62-80P-G2	3637970
120	EMME-AS-100-... EMMS-AS-100-...	EAMM-A-S62-100 A-G2	3637960

Toothed belt axes ELGA-TB, with recirculating ball bearing guide KF/roller bearing guide RF

FESTO

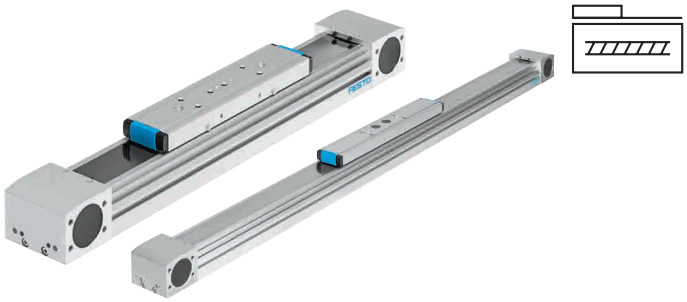

- Internal guide is protected by the magnetically sealed cover band
- Sealing air connections prevent dirt getting into the axis
- ELGA-TB-KF: integrated recirculating ball bearing guide for high feed forces Internal guide and ball screw
- ELGA-TB-RF: integrated roller bearing guide for high loads and torque loads

Order code

Toothed belt axis with recirculating ball bearing guide KF

001		002		003		004		005		006		007		008
ELGA	–	TB	–	KF	–		–		–	OH	–		–	

001	Type
ELGA	Linear axis

002	Drive function
TB	Toothed belt

003	Guide
KF	Recirculating ball bearing guide

004	Size
...	70, 80, 120, 150

005	Stroke [mm]
...	1 ... 8500

006	Stroke reserve [mm]
OH	No stroke reserve

007	Displacement encoder, incremental
–	Without

008	Displacement encoder attachment position
–	Without

Toothed belt axis with roller bearing guide RF

001		002		003		004		005		006		007
ELGA	–	TB	–	rec.	–		–		–	OH	–	

001	Type
ELGA	Linear axis

002	Drive function
TB	Toothed belt

003	Guide
RF	Roller bearing

004	Size
...	70, 80, 120

005	Stroke [mm]
...	1 ... 7400

006	Stroke reserve [mm]
OH	No stroke reserve

007	Protection against particles
–	Standard

Legend: Mandatory entry Optional entry

Order

Configurable product

This product and all its product options can be ordered using the configurator.

The configurator can be found under Products at
➔ **www.festo.com/catalogue/...**

Enter the type or the configuration part number in the search field.

Configuration part no.

Toothed belt axis with recirculating ball bearing guide KF

004 Size	Type	Part no.
70	ELGA-TB-KF-70-...–0H	8024914
80	ELGA-TB-KF-80-...–0H	8024915
120	ELGA-TB-KF-120-...–0H	8024916
150	ELGA-TB-KF-150-...–0H	8024917

Toothed belt axis with roller bearing guide RF

004 Size	Type	Part no.
70	ELGA-TB-RF-70-...–0H	1371245
80	ELGA-TB-RF-80-...–0H	1371246
120	ELGA-TB-RF-120-...–0H	1371247

Accessories

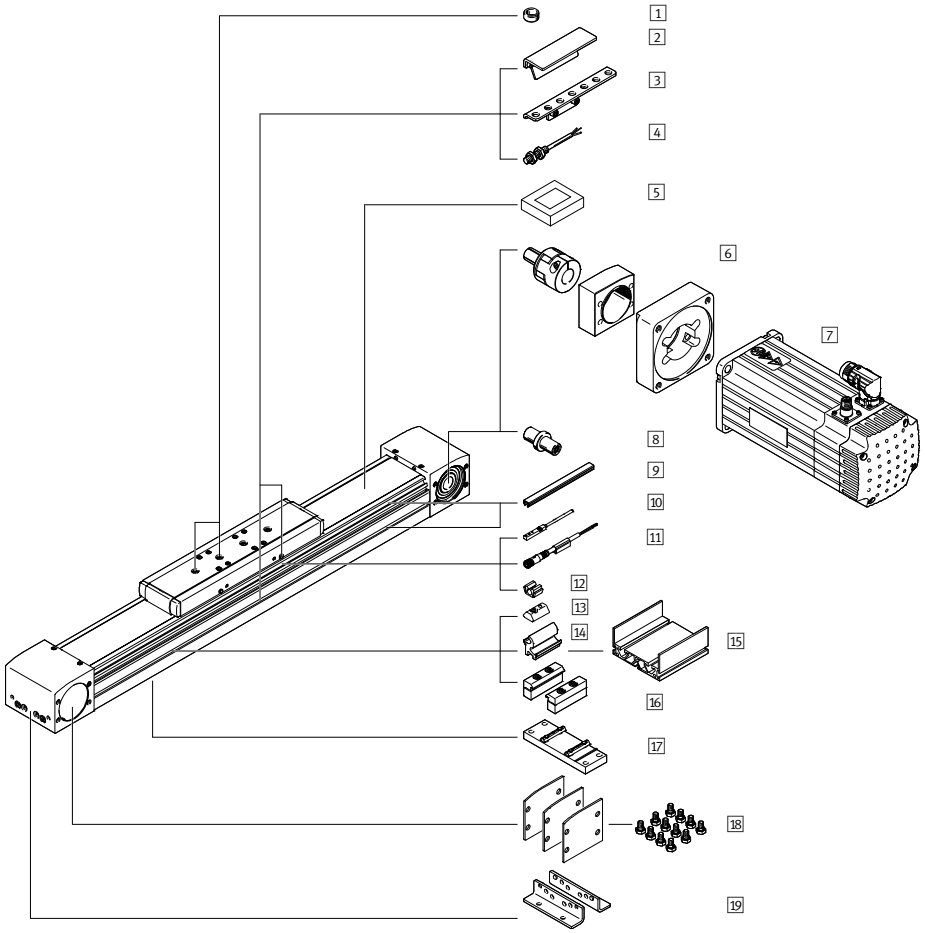

1 Centring pin/sleeve ZBS/ZBH ➔ 74
2 Switch lug SF ➔ 74
3 Sensor bracket HWS ➔ elga-tb
4 Inductive proximity sensor SIEN ➔ 74
5 Clamping element EADT ➔ elga-tb
6 Axial kit EAMM-A ➔ 75
7 Motor EMME/EMMS ➔ 85/87
8 Drive shaft EAMB ➔ elga-tb
9 Slot cover ABP/ABP-S ➔ abp
10 Inductive proximity sensor SIES ➔ 63
11 Connecting cable NEBU ➔ 75
12 Clip SMBK ➔ elga-tb
13 Slot nut NST ➔ 75
14 Adapter kit DHAM ➔ elga-tb
15 Support profile HMIA ➔ elga-tb
16 Profile mounting MUE ➔ 75
17 Central support EAHF ➔ 75
18 Cover kit EASC ➔ elga-tb
19 Foot mounting HPE ➔ 75

1 Centring pin/sleeve ZBS/ZBH

For size	Type	Part no.
70	ZBS-5[1)2)]	150928
70, 80, 120, 150	ZBH-9[1)2)]	150927

1) Packaging unit 10 pieces.
2) 2 centring pins/sleeves included in the scope of delivery of the axis.

2 Switch lug SF-EGC [3)]

For size	Type	Part no.
70	SF-EGC-1-70	558047
80	SF-EGC-1-80	558048
120	SF-EGC-1-120	558049
150	SF-EGC-1-185	558051

3) For sensing via proximity sensor SIES-8M.

4 Inductive proximity sensor SIEN

For size	Description	Type	Part no.
N/O contact, M8			
50, 70, 80, 120, 185	PNP, cable	SIEN-M8B-PS-K-L	150386
	PNP, plug	SIEN-M8B-PS-K-L	150387
N/C contact, M8			
50, 70, 80, 120, 185	PNP, cable	SIEN-M8B-PO-K-L	150390
	PNP, plug	SIEN-M8B-PO-K-L	150391

FESTO

Accessories

6 Axial kit EAMM-A

For	With motor EMMS, EMME Gear unit EMGA	Type	Part no.
In combination with stepper motor EMMS-ST			
70	EMMS-ST-87-...	EAMM-A-N38-87 A	3324111
In combination with stepper motor EMMS-ST and gear unit EMGA			
70	EMMS-ST-57-... EMGA-60-P-G...-SST-57	EAMM-A-N38-60G	1202253
80	EMMS-ST-87-... EMGA-80-P-G...-SST-87	EAMM-A-N48-80G	1258793
80	EMMS-ST-57-... EMGA-60-P-G...-SST-57	EAMM-A-N48-60G	1972527
120	EMMS-ST-87-... EMGA-80-P-G...-SST-87	EAMM-A-N80-80G	2372096
In combination with servo motor EMME-AS, EMMS-AS			
70	EMMS-AS-55-... EMGA-60-P-G...-SAS-55	EAMM-A-N38-60G	1202253
	EMMS-AS-70-... EMGA-60-P-G...-SAS-70		
80	EMMS-AS-70-... EMGA-80-P-G...-SAS-70	EAMM-A-N48-80G	1258793
	EMME-AS-80-... EMGA-80-P-G...-EAS-80		
	EMME-AS-100-... EMGA-80-P-G...-SAS-100		
	EMMS-AS-100-... EMGA-80-P-G...-SAS-100		
80	EMMS-AS-55-... EMGA-60-P-G...-SAS-55	EAMM-A-N48-60G	1972527
	EMMS-AS-70-... EMGA-60-P-G...-SAS-70		
120	EMMS-AS-70-... EMGA-80-P-G...-SAS-70	EAMM-A-N80-80G	2372096
	EMME-AS-80-... EMGA-80-P-G...-EAS-80		
	EMME-AS-100-... EMGA-80-P-G...-SAS-100		
	EMMS-AS-100-... EMGA-80-P-G...-SAS-100		
120	EMME-AS-100-... EMGA-120-P-G...-SAS-100	EAMM-A-N80-120G	1201695
	EMMS-AS-100-... EMGA-120-P-G...-SAS-100		
	EMMS-AS-140-... EMGA-120-P-G...-SAS-140		
150	EMME-AS-100-... EMGA-120-P-G...-SAS-100	EAMM-A-L95-120G-G2	3659941
	EMMS-AS-100-... EMGA-120-P-G...-SAS-100		
	EMMS-AS-140-... EMGA-120-P-G...-SAS-140		

11 Connecting cable NEBU

For size	Description	Type	Part no.
M8x1, 3-pin, with cable			
70, 80, 120, 150	Straight socket, 2.5 m	NEBU-M8G3-K-2.5-LE3	541333
	Straight socket, 5 m	NEBU-M8G3-K-5-LE3	541334
70, 80, 120, 150	Angled socket, 2.5 m	NEBU-M8W3-K-2.5-LE3	541338
	Angled socket, 5 m	NEBU-M8W3-K-5-LE3	541341

13 Slot nut NST

For size	Type	Part no.
70, 80	NST-5-M5	150914
120, 150	NST-8-M6	150915

16 Profile mounting MUE

For size	Type	Part no.
70, 80	MUE-70/80	558043
120, 150	MUE-120/185	558044

17 Central support EAHF-L5

For size	Type	Part no.
70	EAHF-L5-70-P	2349256
80	EAHF-L5-80-P	3535188
120	EAHF-L5-120-P	2410274
150	EAHF-L5-150-P	3535189

19 Foot mounting HPE

For size	Type	Part no.
70	HPE-70	558321
80	HPE-80	558322
120	HPE-120	558323
120	HPE-150	3002636

Rotary drives ERMO, electric

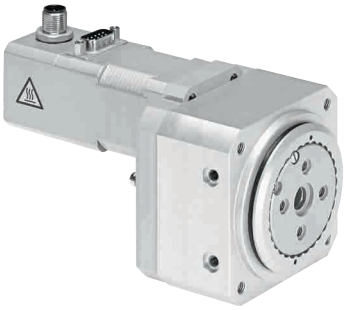

- With stepper motor and integrated gear unit
- ServoLite – closed-loop operation with encoder
- Simple and direct mounting on electric cylinder EPCO with guide unit EAGF
- Optional holding brake
- Hollow shaft for energy throughfeed for attachments

Order code

001	002	003	004	005	006	007	008	009	010
ERMO		ST	E						

Legend: Mandatory entry; Optional entry

001	Type
ERMO	Rotary drive

002	Size
...	12, 16, 25, 32

003	Motor type
ST	Stepper motor

004	Measuring unit
E	With encoder

005	Brake
–	Without

006	Cable outlet direction
–	Top (standard)

007	Connecting cable to motor controller
–	Without

008	Controller type
–	Without

009	Bus protocol/activation
–	Without

010	Switching input/output
–	Without

Product options

B With brake
L Cable outlet direction left
R Cable outlet direction right

...E Connecting cable to motor controller: 1.5 m, 2.5 m, 5 m, 7 m, 10 m, suitable for use with energy chains, straight plug
...EA Connecting cable to motor controller: 1.5 m, 2.5 m, 5 m, 7 m, 10 m, suitable for use with energy chains, angled plug

C5 Controller type CMMO
DIO Control digital I/O interface
LK Activation IO-Link®

N Switching input/output NPN
P Switching input/output PNP

Ordering data – Product options

Configurable product

This product and all its product options can be ordered using the configurator.

The configurator can be found under Products at
➔ **www.festo.com/catalogue/...**

Enter the type or the configuration part number in the search field.

Configuration part no.

002 Size	Type	Part no.
12	ERMO-12-ST-E	3008525
16	ERMO-16-ST-E	3008526
25	ERMO-25-ST-E	3008527
32	ERMO-32-ST-E	3008528

FESTO

Accessories

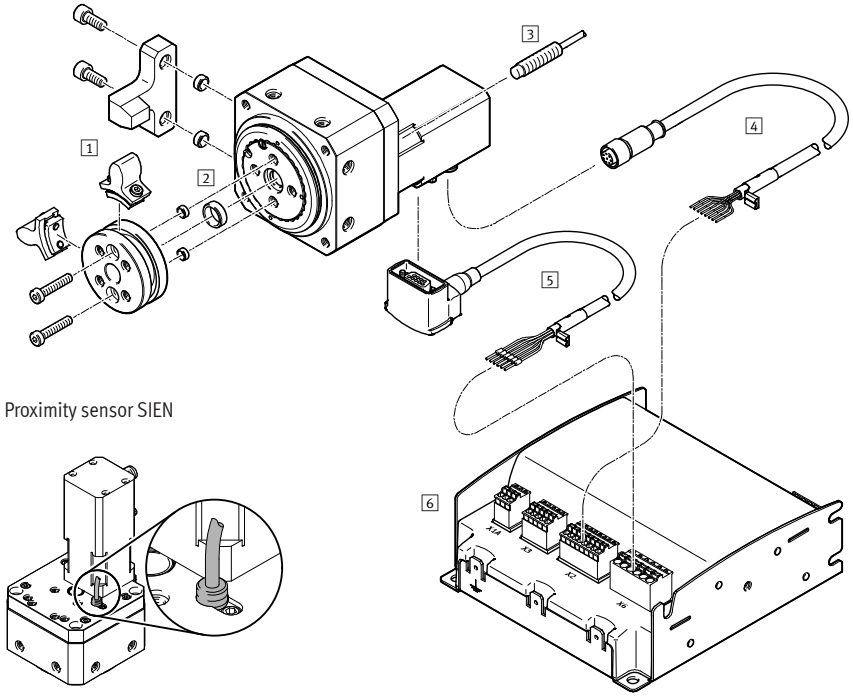

Proximity sensor SIEN

1 Stop kit EADP ➔ 77
2 Centring sleeve ZBH ➔ 77
3 Inductive proximity sensor SIEN ➔ 77
Connecting cable SIM, NEBU ➔ 77
4 Motor cable NEBM ➔ 77
5 Encoder cable NEBM ➔ 78
6 Motor controller CMMO ➔ 91

1 Stop kit EADP

For size	Type	Part no.
12	EADP-ES-R3-12	3044562
16	EADP-ES-R3-16	2715501
25	EADP-ES-R3-25	2721599
32	EADP-ES-R3-32	2735411

2 Centring sleeve ZBH, central mounting SLZZ

For size	Type	Part no.
12, 16	ZBH-7[1)2)]	186717
25	ZBH-9[1)2)]	150927
32	ZBH-12[1)2)]	189653
12, 16, 25, 32	ZBH-7[2)3)]	186717
12, 16	ZBH-12[2)4)]	189653
25	ZBH-15[2)4)]	191409
32	SLZZ-25/16[4)5)]	150901

1) For centring the drive for lateral mounting.
2) Packaging unit 10 pieces.
3) For centring attachments on the rotating plate.
4) For centring attachments in the middle of the rotating plate.
5) Packaging unit 1 piece.

3 Inductive proximity sensor SIEN

For size	Description	Type	Part no.
N/O			
12	M5, PNP, 2.5 m cable	SIEN-M5B-PS-K-L	150370
	M5, PNP, plug	SIEN-M5B-PS-S-L	150371
12, 16, 25, 32	M8, PNP, cable	SIEN-M8B-PS-K-L	150386
	M8, PNP, plug	SIEN-M8B-PS-K-L	150387
N/C contact			
12	M5, PNP, 2.5 m cable	SIEN-M5B-PO-K-L	150374
	M5, PNP, plug	SIEN-M5B-PO-S-L	150375
12, 16, 25, 32	M8, PNP, cable	SIEN-M8B-PO-K-L	150390
	M8, PNP, plug	SIEN-M8B-PO-K-L	150391

3 Connecting cable SIM, NEBU

For size	Description	Type	Part no.
M8x1, 3-pin, with cable			
12, 16, 25, 32	Straight socket, 2.5 m	SIM-M8-3GD-2,5-PU	159420
12, 16, 25, 32	Straight socket, 2.5 m	NEBU-M8G3-K-2.5-LE3	541333
	Straight socket, 5 m	NEBU-M8G3-K-5-LE3	541334
12, 16, 25, 32	Angled socket, 2.5 m	NEBU-M8W3-K-2.5-LE3	541338
	Angled socket, 5 m	NEBU-M8W3-K-5-LE3	541341

4 Motor cable[6)]

For size	Description	Type	Part no.
Straight plug with cable			
12, 16	1.5 m	NEBM-M12G8-E-1.5-Q5-LE6	1449600
	2.5 m	NEBM-M12G8-E-2.5-Q5-LE6	1449601
	5 m	NEBM-M12G8-E-5-Q5-LE6	1449602
	7 m	NEBM-M12G8-E-7-Q5-LE6	1449603
	10 m	NEBM-M12G8-E-10-Q5-LE6	1449604
Straight plug with cable			
25, 32	1.5 m	NEBM-S1G9-E-1.5-Q5-LE6	1450368
	2.5 m	NEBM-S1G9-E-2.5-Q5-LE6	1450369
	5 m	NEBM-S1G9-E-5-Q5-LE6	1450370
	7 m	NEBM-S1G9-E-7-Q5-LE6	1450371
	10 m	NEBM-S1G9-E-10-Q5-LE6	1450372
Angled plug with cable			
25, 32	1.5 m	NEBM-S1W9-E-1.5-Q5-LE6	1450736
	2.5 m	NEBM-S1W9-E-2.5-Q5-LE6	1450737
	5 m	NEBM-S1W9-E-5-Q5-LE6	1450738
	7 m	NEBM-S1W9-E-7-Q5-LE6	1450739
	10 m	NEBM-S1W9-E-10-Q5-LE6	1450740

6) Other cable lengths on request.

FESTO

Accessories

5 Encoder cable[6]			
For size	Description	Type	Part no.
Straight plug with cable			
12, 16, 25, 32	1.5 m	NEBM-M12G8-E-1.5-LE8	1451586
	2.5 m	NEBM-M12G8-E-2.5-LE8	1451587
	5 m	NEBM-M12G8-E-5-LE8	1451588
	7 m	NEBM-M12G8-E-7-LE8	1451589
	10 m	NEBM-M12G8-E-10-LE8	1451590
Angled plug with cable			
25, 32	1.5 m	NEBM-M12W8-E-1.5-LE8	1451674
	2.5 m	NEBM-M12W8-E-2.5-LE8	1451675
	5 m	NEBM-M12W8-E-5-LE8	1451676
	7 m	NEBM-M12W8-E-7-LE8	1451677
	10 m	NEBM-M12W8-E-10-LE8	1451678

6) Other cable lengths on request.

6 Motor controller			
For size	Description	Type	Part no.
With I/O interface			
12, 16, 25, 32	PNP	CMMO-ST-C5-1-DIOP	1512316
	NPN	CMMO-ST-C5-1-DION	1512317
With IO-Link®			
12, 16, 25, 32	PNP	CMMO-ST-C5-1-LKP	1512320

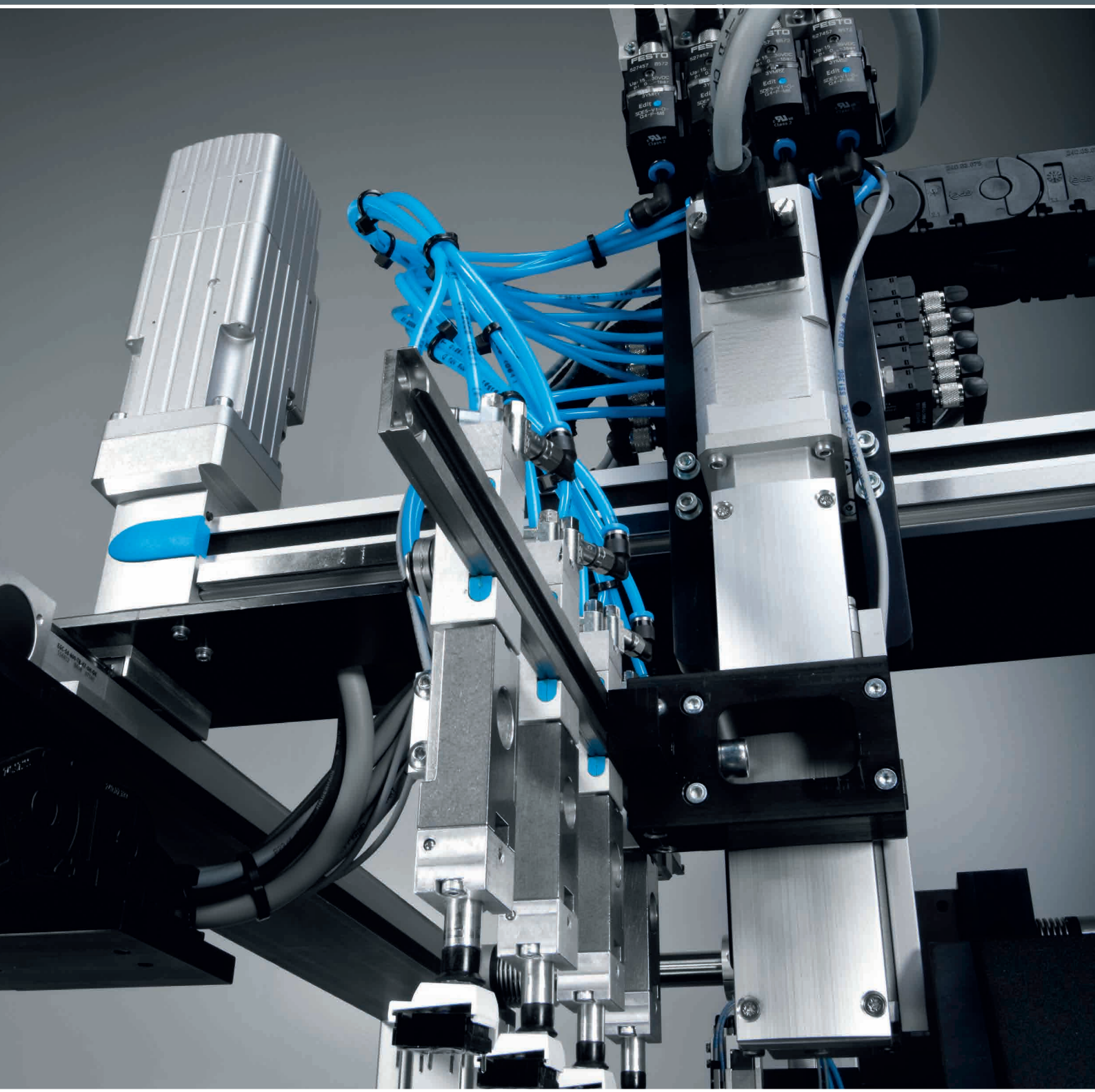

Motors and controllers

03

Highlights

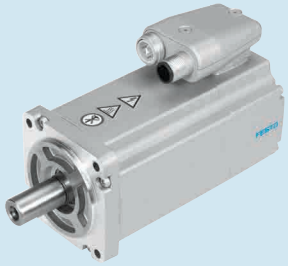

EMME-AS

Servo motors

+ Brushless, permanently excited synchronous servo motor
+ Digital absolute displacement encoder, single-turn or multi-turn

Page 85

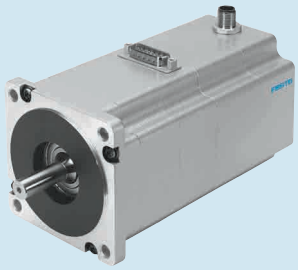

EMMS-ST

Stepper motors

+ Small increment and high driving torques thanks to 2-phase hybrid technology
+ Optimised connection technology

Page 87

CMMP-AS

Motor controllers

+ Numerous interfaces and functions
+ High precision and mass inertia ratio

Page 89

CMMS-ST

Motor controllers

+ For actuating stepper motors EMMS-ST and drives EPCO, ELGR, ERMO
+ Easy and convenient commissioning

Page 93

Contents

Product overview 81
Servo motors EMME-AS 85
Stepper motors EMMS-ST. 87
Motor controllers CMMP-AS 89
Motor controllers CMMO-ST 91
Motor controllers CMMS-ST 93

FESTO

Software tool

Festo Configuration Tool (FCT)	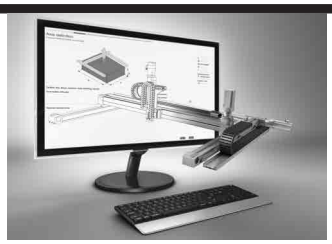	FCT is a configuration and parameterisation software program that supports almost all Festo devices, in particular motor controllers. It is extremely flexible, provides full support for the device properties and is simple and intuitive to operate. The user is guided step-by-step through the commissioning process while each individual step is checked.	The parameterisation software can be found on the website under Support › Support Portal › enter search term › select “Software” tab.
PositioningDrives: Selection and sizing of electromechanical drives, motors and gear units	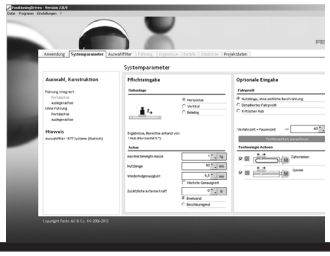	Which electromechanical linear drive, which motor and which gear unit best meets your needs? Enter the data for your application, such as position values, effective loads and mounting position, and the software suggests a number of solutions.	This tool can be found • on our website at www.festo.com/catalogue by clicking on the blue button ”Engineering”

3

Servo motors

	 Servo motors **EMME-AS**
Nominal torque	0.12 … 6.4 Nm
Nominal rotary speed	3000 … 9000 rpm
Peak torque	0.7 … 30 Nm
Maximum speed	3910 … 10000 1/min
Description	• Brushless, permanently excited synchronous servo motor • Digital absolute displacement encoder, single-turn or multi-turn • Reliable, dynamic, precise • Optimised connection technology • Over 40 types in stock • Available with holding brake • Optional multi-turn encoder with SIL2
➔ **Page/online**	**85**

FESTO

Stepper motors

	 Stepper motors **EMMS-ST**
Maximum speed	430 … 6000 rpm
Motor holding torque	0.09 … 9.3 Nm
Description	• Small increment and high driving torques • 28 stock types • With incremental encoder for closed-loop operation • Available with holding brake
➔ **Page/online**	**87**

3

Controllers for AC servo motors

	 Motor controllers **CMMP-AS**
Nominal current	2 … 20 A
Nominal operating voltage AC	230 … 400 V
Nominal operating voltage phases	1-phase, 3-phase
Rated output of controller	500 … 9000 VA
Fieldbus coupling	CANopen, DeviceNet, EtherCAT, EtherNet/IP, Modbus/TCP, PROFIBUS DP, PROFINET
Description	• Numerous interfaces and functions for decentralised motion functions (flying saw, flying measurement, modulo function, etc.) • Optional: integrated cam disk controllers and highly dynamic movements • Interpolating movement via CANopen and EtherCat • Standardised interfaces allow seamless integration in mechatronic multi-axis modular systems • Reliable and easy commissioning and parameterisation with the Festo Configuration Tool (FCT)
➔ **Page/online**	**89**

FESTO

Controllers for stepper motors

	 Motor controllers **CMMO-ST**
Nominal current, load supply	6 A
Nominal voltage, load supply DC	24 V
Fieldbus coupling	Ethernet
Description	• Motor controllers from the Optimised Motion Series (for drives EPCO, ELGR, ERMO) • With convenient FCT commissioning for stepper motor EMMS-ST • Quick and easy parameterisation via web browser and parameter cloud • Reliable and easy commissioning and parameterisation with the Festo Configuration Tool (FCT) • Simple actuation via digital I/Os, IO-Link®, I-Port, Modbus® TCP • Safety function Safe Torque Off (STO) PLe • Sinusoidal current injection for especially silent motor operation
➔ Page/online	**91**

Positioners for process automation

	 Positioners **CMSX**
Standard nominal flow rate	50 … 130 l/min
Ambient temperature	–5 … 60 °C
Setpoint value	0 – 20 mA, 4 – 20 mA, 0 – 10 V
Operating pressure	3 … 8 bar
Safety information	Adjustable, opening, closing, holding
Operating voltage range DC	21.6 … 26.4 V
Description	• For position control of double-acting pneumatic quarter turn actuators in process automation systems • Simple and efficient position control based on the PID control algorithm • Suitable for quarter turn actuators with a swivel angle of approx. 90° and a mechanical interface in accordance with VDI/VDE Directive 3845 • Power supply 24 V DC
➔ Page/online	**259**

FESTO

Safety systems

	Safety modules CAMC-G-S1	**Safety modules CAMC-G-S3**
Safety function	Safe Torque Off (STO)	Safe Torque Off (STO), Safe Stop 1 (SS1), Safe Stop 2 (SS2), Safe Operating Stop (SOS), Safely Limited Speed (SLS), Safe Speed Range (SSR), Safe Brake Control (SBC), Safe Speed Monitor (SSM)
Safety Integrity Level (SIL)	Safe Torque Off (STO) / SIL 3 / SILCL 3	Safe Brake Control (SBC) / SIL 3, Safely Limited Speed (SLS) / SIL 3, Safe Operating Stop (SOS) / SIL 3, Safe Stop 1 (SS1) / SIL 3, Safe Stop 2 (SS2) / SIL 3, Safe Speed Monitor (SSM) / SIL 3, Safe Speed Range (SSR) / SIL 3, Safe Torque Off (STO) / SIL 3
Characteristics of logic inputs	Electrically isolated	4 safe, 2-channel inputs equivalent/antivalent switching, configurable test pulses, configurable function, 6 safe, 1-channel inputs, configurable test pulses
Number of digital logic inputs	2	10
Digital output design	Potential-free signal contact	3 safe, 2-channel semiconductor outputs
Description	• Plug-in module • For motor controller CMMP-AS-...-M3	• Plug-in module • For motor controller CMMP-AS-...-M3
➔ Page/online	**90**	**90**

Gear units

	Gear units EMGA-SST	**Gear units EMGA-EAS**
Continuous output torque	11 ... 110 Nm	11 ... 110 Nm
Max. drive speed	7000 ... 18000 rpm	7000 ... 18000 rpm
Torsional rigidity	1 ... 6 Nm/arcmin	1 ... 6 Nm/arcmin
Torsional backlash	0.12 ... 0.25°	0.12 ... 0.25°
Mass moment of inertia Gear units	0.019 ... 0.77 kgcm²	0.019 ... 0.77 kgcm²
Max. efficiency	98%	98%
Description	• Planetary gear unit for stepper motors EMMS-ST • Gear ratio i = 3 and i = 5, available from stock • Life-time lubrication	• Planetary gear unit for servo motors EMMS-AS • Gear ratio i = 3 and i = 5, available from stock • Life-time lubrication
➔ Page/online	**88**	**86**

FESTO

- Brushless, permanently excited synchronous servo motor
- Reliable, dynamic, precise
- Selectable feedback systems: digital absolute displacement encoder, single turn or multi-turn
- Optimised connection technology

Order code

001		002		003		004	005		006		007	008	009
EMME	–	AS	–		–			–		–	A		

Legend: Mandatory entry Optional entry

001	Type
EMME	Motor

002	Motor technology
AS	Servo motor

003	Motor flange size
...	40, 60, 80, 100

004	Length
S	Short
M	Medium

005	Output shaft
–	Smooth shaft

006	Winding
LS	Low-voltage, standard
LV	Low-voltage, speed-optimised
HS	High-voltage, standard

007	Electrical connection
A	Angled plug, fixed – outlet direction: shaft

008	Measuring unit
S	Absolute encoder, single-turn
M	Absolute encoder, multi-turn

009	Brake
–	Without
B	With brake

Product options

K Output shaft: shaft to DIN 6885 (with feather key)

MX Measuring unit absolute safety encoder, multi-turn

Ordering – Product options

Configurable product

This product and all its product options can be ordered using the configurator.

The configurator can be found under Products at
➔ **www.festo.com/catalogue/...**

Enter the type or the configuration part number in the search field.

FESTO

Ordering

003 Motor flange size [mm]	004 Overall length S: short				004 Overall length M: medium			
	009 Without brake		009 With brake: B		009 Without brake		009 With brake: B	
	Type	Part no.	Type	Part no.	Type	Part no.	Type	Part no.
	006 Winding LV: low-voltage, speed-optimised – 008 Measuring unit S: absolute encoder, single-turn							
40	EMME-AS-40-S-LV-AS	2082428	EMME-AS-40-S-LV-ASB	2082430	EMME-AS-40-M-LV-AS	2082444	EMME-AS-40-M-LV-ASB	2082446
	006 Winding LV: low-voltage, speed-optimised – 008 Measuring unit M: absolute encoder, multi-turn							
40	EMME-AS-40-S-LV-AM	2082429	EMME-AS-40-S-LV-AMB	2082431	EMME-AS-40-M-LV-AM	2082445	EMME-AS-40-M-LV-AMB	2082447
	006 Winding LS: low-voltage, standard – 008 Measuring unit S: absolute encoder, single-turn							
60	EMME-AS-60-S-LS-AS	2089698	EMME-AS-60-S-LS-ASB	2089700	EMME-AS-60-M-LS-AS	2089730	EMME-AS-60-M-LS-ASB	2089732
80	EMME-AS-80-S-LS-AS	2093104	EMME-AS-80-S-LS-ASB	2093106	EMME-AS-80-M-LS-AS	2093168	EMME-AS-80-M-LS-ASB	2093170
	006 Winding LS: low-voltage, standard – 008 Measuring unit M: absolute encoder, multi-turn							
60	EMME-AS-60-S-LS-AM	2089699	EMME-AS-60-S-LS-AMB	2089701	EMME-AS-60-M-LS-AM	2089731	EMME-AS-60-M-LS-AMB	2089733
80	EMME-AS-80-S-LS-AM	2093105	EMME-AS-80-S-LS-AMB	2093107	EMME-AS-80-M-LS-AM	2093169	EMME-AS-80-M-LS-AMB	2093171
	006 Winding HS: high-voltage, standard – 008 Measuring unit S: absolute encoder, single-turn							
80	EMME-AS-80-S-HS-AS	2093136	EMME-AS-80-S-HS-ASB	2093138	EMME-AS-80-M-HS-AS	2093200	EMME-AS-80-M-HS-ASB	2093202
100	EMME-AS-100-S-HS-AS	2103467	EMME-AS-100-S-HS-ASB	2103469	EMME-AS-100-M-HS-AS	2103499	EMME-AS-100-M-HS-ASB	2103501
	006 Winding HS: high-voltage, standard – 008 Measuring unit M: absolute encoder, multi-turn							
80	EMME-AS-80-S-HS-AM	2093137	EMME-AS-80-S-HS-AMB	2093139	EMME-AS-80-M-HS-AM	2093201	EMME-AS-80-M-HS-AMB	2093203
100	EMME-AS-100-S-HS-AM	2103468	EMME-AS-100-S-HS-AMB	2103470	EMME-AS-100-M-HS-AM	2103500	EMME-AS-100-M-HS-AMB	2103502

Accessories

Gear units EMGA-EAS

For	Gear ratio	Gear unit flange size	Type	Part no.
EMME-AS-40	3:1	40 mm	EMGA-40-P-G3-EAS-40	2297684
	5:1	40 mm	EMGA-40-P-G5-EAS-40	2297685
EMME-AS-60	3:1	60 mm	EMGA-60-P-G3-EAS-60	2297686
	5:1	60 mm	EMGA-60-P-G5-EAS-60	2297687
EMME-AS-80	3:1	80 mm	EMGA-80-P-G3-EAS-80	2297690
	5:1	80 mm	EMGA-80-P-G5-EAS-80	2297691
EMME-AS-100	3:1	80 mm	EMGA-80-P-G3-SAS-100	552194
	5:1	80 mm	EMGA-80-P-G5-SAS-100	552195
	3:1	120 mm	EMGA-120-P-G3-SAS-100	552196
	5:1	120 mm	EMGA-120-P-G5-SAS-100	552197

Motor cable NEBM-M16G8

For	Cable length [m]	Type	Part no.
Cable cross section: 0.75 mm²			
EMME-AS-40/60	2.5	NEBM-M16G8-E-2.5-Q7-LE8	8004662
	5	NEBM-M16G8-E-5-Q7-LE8	8003770
	7.5	NEBM-M16G8-E-7.5-Q7-LE8	8004663
	10	NEBM-M16G8-E-10-Q7-LE8	8003771
	15	NEBM-M16G8-E-15-Q7-LE8	8003772
Cable cross section: 1.55 mm²			
EMME-AS-80/100	2.5	NEBM-M16G8-E-2.5-Q9-LE8	8004660
	5	NEBM-M16G8-E-5-Q9-LE8	8003766
	7.5	NEBM-M16G8-E-7.5-Q9-LE8	8004661
	10	NEBM-M16G8-E-10-Q9-LE8	8003767
	15	NEBM-M16G8-E-15-Q9-LE8	8003768

Encoder cable NEBM-M12G8

For	Cable length [m]	Type	Part no.
EMME-AS-40/60/80/100	2.5	NEBM-M12G8-E-2.5-N-S1G15	8004664
	5	NEBM-M12G8-E-5-N-S1G15	8003762
	7.5	NEBM-M12G8-E-7.5-N-S1G15	8004665
	10	NEBM-M12G8-E-10-N-S1G15	8003763
	15	NEBM-M12G8-E-15-N-S1G15	8003764

FESTO

- 2-phase hybrid technology
- Standard industrial connection technology
- Optional: encoder, brake

Order code

001		002		003		004		005	006	007		008
EMMS	–	ST	–		–		–	S			–	

Legend: Mandatory entry; Optional entry

001	Type
EMMS	Motor

002	Motor technology
ST	Stepper motor

003	Motor flange size
...	28, 42, 57, 87

004	Length
S	Short
M	Medium
L	Long

005	Electrical connection
S	Straight plug

006	Measuring unit
–	Without
E	Encoder

007	Brake
–	Without
B	With brake

008	Generation
–	First generation
G2	Second generation

Ordering – Product options

Configurable product

This product and all its product options can be ordered using the configurator.

The configurator can be found under Products at
→ **www.festo.com/catalogue/...**

Enter the type or the configuration part number in the search field.

Ordering – Overall length short, medium

003 Motor flange size	004 Overall length S: short				004 Overall length M: medium			
	007 Without brake		007 With brake: B		007 Without brake		007 With brake: B	
	Type	Part no.	Type	Part no.	Type	Part no.	Type	Part no.
	006 Without measuring unit – 008 Second generation							
42	EMMS-ST-42-S-S-G2	1370470	EMMS-ST-42-S-SB-G2	1370472				
	006 Measuring unit E: with encoder – 008 Second generation							
42	EMMS-ST-42-S-SE-G2	1370471	EMMS-ST-42-S-SEB-G2	1370473				
	006 Without measuring unit – 008 Second generation							
57	EMMS-ST-57-S-S-G2	1370474	EMMS-ST-57-S-SB-G2	1370476	EMMS-ST-57-M-S-G2	1370478	EMMS-ST-57-M-SB-G2	1370480
	006 Measuring unit E: with encoder – 008 Second generation							
57	EMMS-ST-57-S-SE-G2	1370475	EMMS-ST-57-S-SEB-G2	1370477	EMMS-ST-57-M-SE-G2	1370479	EMMS-ST-57-M-SEB-G2	1370481
	006 Without measuring unit – 008 Second generation							
87	EMMS-ST-87-S-S-G2	1370482	EMMS-ST-87-S-SB-G2	1370484	EMMS-ST-87-M-S-G2	1370486	EMMS-ST-87-M-SB-G2	1370488
	006 Measuring unit E: with encoder – 008 Second generation							
87	EMMS-ST-87-S-SE-G2	1370483	EMMS-ST-87-S-SEB-G2	1370485	EMMS-ST-87-M-SE-G2	1370487	EMMS-ST-87-M-SEB-G2	1370489

FESTO

Ordering – Overall length long

003 Motor flange size	004 Overall length L: long			
	007 Without brake		007 With brake: B	
	Type	Part no.	Type	Part no.
	006 Without measuring unit – 008 First generation			
28	EMMS-ST-28-L-S	1451384	EMMS-ST-28-L-SB	1451383
	006 Measuring unit E: with encoder – 008 First generation			
28	EMMS-ST-28-L-SE	1430663	EMMS-ST-28-L-SEB	1451382
	006 Without measuring unit – 008 Second generation			
87	EMMS-ST-87-L-S-G2	1370490	EMMS-ST-87-L-SB-G2	1370493
	006 Measuring unit E: with encoder – 008 Second generation			
87	EMMS-ST-87-L-SE-G2	1370491	EMMS-ST-87-L-SEB-G2	1370494

Accessories

Gear unit EMGA-SST

For	Gear ratio	Gear unit flange size	Type	Part no.
EMMS-ST-42	3:1	40 mm	EMGA-40-P-G3-SST-42	549428
	5:1	40 mm	EMGA-40-P-G5-SST-42	549429
EMMS-ST-57	3:1	60 mm	EMGA-60-P-G3-SST-57	549430
	5:1	60 mm	EMGA-60-P-G5-SST-57	549431
EMMS-ST-87	3:1	80 mm	EMGA-80-P-G3-SST-87	549432
	5:1	80 mm	EMGA-80-P-G5-SST-87	549433

Motor cable NEBM-S

For	Cable length [m]	Type	Part no.
Straight plug, min.bending radius: 62 mm, suitable for use with energy chains			
EMMS-ST-28 and motor controller CMMO-ST	1.5	NEBM-M12G8-E-1.5-Q5-LE6	1449600
	2.5	NEBM-M12G8-E-2.5-Q5-LE6	1449601
	5	NEBM-M12G8-E-5-Q5-LE6	1449602
	7	NEBM-M12G8-E-7-Q5-LE6	1449603
	10	NEBM-M12G8-E-10-Q5-LE6	1449604
Straight plug, min.bending radius: 62 mm, suitable for use with energy chains			
EMMS-ST-42/57 and motor controller CMMS-ST/CMMO-ST	1.5	NEBM-S1G9-E-1.5-Q5-LE6	1450368
	2.5	NEBM-S1G9-E-2.5-Q5-LE6	1450369
	5	NEBM-S1G9-E-5-Q5-LE6	1450370
	7	NEBM-S1G9-E-7-Q5-LE6	1450371
	10	NEBM-S1G9-E-10-Q5-LE6	1450372
Angled plug, min.bending radius: 62 mm, suitable for use with energy chains			
EMMS-ST-42/57 and motor controller CMMS-ST/CMMO-ST	1.5	NEBM-S1W9-E-1.5-Q5-LE6	1450736
	2.5	NEBM-S1W9-E-2.5-Q5-LE6	1450737
	5	NEBM-S1W9-E-5-Q5-LE6	1450738
	7	NEBM-S1W9-E-7-Q5-LE6	1450739
	10	NEBM-S1W9-E-10-Q5-LE6	1450740
Straight plug, min.bending radius: 80 mm, suitable for use with energy chains			
EMMS-ST-87 and motor controller CMMS-ST/CMMO-ST	1.5	NEBM-S1G15-E-1.5-Q7-LE6	1450834
	2.5	NEBM-S1G15-E-2.5-Q7-LE6	1450835
	5	NEBM-S1G15-E-5-Q7-LE6	1450836
	7	NEBM-S1G15-E-7-Q7-LE6	1450837
	10	NEBM-S1G15-E-10-Q7-LE6	1450838
Angled plug, min.bending radius: 80 mm, suitable for use with energy chains			
EMMS-ST-87 and motor controller CMMS-ST/CMMO-ST	1.5	NEBM-S1W15-E-1.5-Q7-LE6	1450943
	2.5	NEBM-S1W15-E-2.5-Q7-LE6	1450944
	5	NEBM-S1W15-E-5-Q7-LE6	1450945
	7	NEBM-S1W15-E-7-Q7-LE6	1450946
	10	NEBM-S1W15-E-10-Q7-LE6	1450947

Encoder cable NEBM-M12

For	Cable length [m]	Type	Part no.
Straight plug, min.bending radius: 51 mm, suitable for use with energy chains			
Motor controller CMMS-ST	5	NEBM-M12G8-E-5-S1G9	550748
	10	NEBM-M12G8-E-10-S1G9	550749
	15	NEBM-M12G8-E-15-S1G9	550750
Straight plug, min.bending radius: 68 mm, suitable for use with energy chains			
Motor controller CMMO-ST	1.5	NEBM-M12G8-E-1.5-LE8	1451586
	2.5	NEBM-M12G8-E-2.5-LE8	1451587
	5	NEBM-M12G8-E-5-LE8	1451588
	7	NEBM-M12G8-E-7-LE8	1451589
	10	NEBM-M12G8-E-10-LE8	1451590
Angled plug, min.bending radius: 68 mm, suitable for use with energy chains			
Motor controller CMMO-ST	1.5	NEBM-M12W8-E-1.5-LE8	1451674
	2.5	NEBM-M12W8-E-2.5-LE8	1451675
	5	NEBM-M12W8-E-5-LE8	1451676
	7	NEBM-M12W8-E-7-LE8	1451677
	10	NEBM-M12W8-E-10-LE8	1451678

FESTO

- Maximum flexibility and modularity with the CMMP-AS-M3
- Short machine cycle times thanks to temporary four-fold increase in motor current and high acceleration
- High precision and mass inertia ratio thanks to short scanning times of the cascade controller
- Very efficient power factor correction for increasing the motor voltage independently of the supply voltage
- Large number of functions permit applications beyond classic drive electronics

Order code – Basic design

001		002		003		004		005		006
CMMP	–	AS	–		–		–		–	

Legend: [ ] Mandatory entry [ ] Optional entry

001	Type
CMMP	Motor controller, premium

002	Motor technology
AS	AC synchronous

003	Nominal current
C2	2.5 A
C5	5 A
C10	10 A

004	Input voltage
3 A	100 … 230 V AC
11 A	3x 230 … 480 V AC

005	Number of phases
–	1-phase
P3	3-phase

006	Number of slots
–	With 2 slots
M3	With 3 slots

Product options

C15 Nominal current 15 A
M0 Without slot

Ordering – Product options

Configurable product

This product and all its product options can be ordered using the configurator.

The configurator can be found under Products at
➔ **www.festo.com/catalogue/...**

Enter the type or the configuration part number in the search field.

Ordering – Basic design

003 Nominal current	004 Input voltage	005 Number of phases	006 Number of slots	Type[1]	Part no.
2.5 A	100 … 230 V AC	1-phase	With 2 slots	CMMP-AS-C2-3 A-M3	1501325
5 A	100 … 230 V AC	1-phase	With 2 slots	CMMP-AS-C5-3 A-M3	1501326
5 A	3x 230 … 480 V AC	3-phase	With 3 slots	CMMP-AS-C5-11 A-P3-M3	1501327
10 A	3x 230 … 480 V AC	3-phase	With 3 slots	CMMP-AS-C10-11 A-P3-M3	1501328

1) The plug assortment NEKM is included in the scope of delivery of the motor controller. A plug-in card in the slot for the switch or safety module is mandatory for operation. Possible plug-in cards: CAMC-DS-M1, CAMC-G-S1, CAMC-G-S3 ➔ 90

FESTO

Accessories

Cables

Cable length [m]	Type	Part no.
Control cable for I/O interface to any controller		
2.5	NEBC-S1G25-K-2.5N-LE26	552254
3.2	NEBC-S1G25-K-3.2N-LE25	8001373
Programming cable		
1.8	NEBC-U1G-K-1.8-N-U2G	1501332

Plugs

Description	Type	Part no.
Encoder plug	NECC-A-S-S1G9-C2M	564264
Plug for PROFIBUS interface		
Sub-D, 9-pin, IP40	FBS-SUB-9-WS-PB-K	533780
Plug for CANopen interface		
Sub-D, 9-pin, IP40	FBS-SUB-9-WS-CO-K	533783
Plug for DeviceNet® interface		
Screw connector, 2 x 5-pin	FBSD-KL-2X5POL	525635

Assortment of plugs

Description	Type	Part no.
For CMMP-AS-C2/-C5-3 A-M3	NEKM-C-7	1659228
For CMMP-AS-C5/-C10-11 A-P3-M3	NEKM-C-3	552256
For interface CAMC-D-8E8A	NEKM-C-5[1]	569959
For safety module CAMC-G-S1	NEKM-C-8[1]	1660640
For safety module CAMC-G-S3	NEKM-C-9[1]	1660937

1) Plugs are included in the scope of delivery of the plug-in card.

Plug-in cards

Description	Type	Part no.
For PROFIBUS interface	CAMC-PB	547450
For DeviceNet® interface	CAMC-DN	547451
For EtherCAT interface	CAMC-EC	567856
For EtherNet/IP interface	CAMC-F-EP	1911917
For PROFINET RT interface	CAMC-F-PN	1911916
Switch module	CAMC-DS-M1[1]	1501329
Interface, for extending the digital I/Os[2]	CAMC-D-8E8A	567855

1) Plugs are included in the scope of delivery of the plug-in card.
2) 8 digital input/outputs.

Braking resistor

Description	Type	Part no.
For CMMP-AS-C2-3 A, CMMP-AS-C5-3 A	CACR-LE2-50-W500[3]	2882342
	CACR-LE2-72-W500	1336611
For CMMP-AS-C5-11 A, CMMP-AS-C10-11 A	CACR-KL2-67-W1800	1336617
	CACR-KL2-40-W2000[3]	2882343

3) Recommended braking resistor.

Safety modules

Safety functions to EN 61800-5-2	Performance Level (PL) to EN ISO 13849-1	Safety Integrity Level (SIL) to EN 61800-5-2, EN 62061, EN 61508	Certificate issuing authority	Type	Part no.
– Safe Torque Off (STO) – Safe Brake Control (SBC)	Category 4, Performance Level e	SIL 3	TÜV 01/205/5165.01/14	CAMC-G-S1	1501330
– Safe Torque Off (STO) – Safe Brake Control (SBC) – Safe Stop 1 (SS1) – Safe Operating Stop (SOS) – Safe Stop 2 (SS2) – Safely Limited Speed (SLS) – Safe Speed Range (SSR) – Safe Speed Monitor (SSM)	Category 4, Performance Level e	SIL 3	TÜV 01/205/5165.01/14	CAMC-G-S3	1501331

FESTO

- Extremely quick and easy commissioning thanks to web technology and parameter cloud
- Full access and diagnostics via a standard web browser do away with the need for handheld terminals
- Supports the Safe Torque Off (STO) safety function
- Compact and space-saving, optimised design
- Reliable position and torque control in servo-lite operation for motors with integrated encoder

Order code

001		002		003		004		005	006
CMMO	–	ST	–	C5	–	1	–		

Legend: Mandatory entry Optional entry

001	Type
CMMO	Motor controller

002	Motor technology
ST	Stepper motor

003	Nominal current
C5	5 A

004	Input voltage
1	DC 24 V

005	Bus protocol/activation
DIO	Digital I/O interface
LK	IO-Link® interface

006	Switching input/output
N	NPN
P	PNP

Ordering

Configurable product

This product and all its product options can be ordered using the configurator.

The configurator can be found under Products at
→ **www.festo.com/catalogue/...**

Enter the type or the configuration part number in the search field.

Ordering

003 **Nominal current**	004 **Input voltage**	005 Bus protocol/activation	006 Switching input/output	Type[1)]	Part no.
5 A	DC 24 V	Digital I/O interface	PNP	CMMO-ST-C5-1-DIOP	1512316
		Digital I/O interface	NPN	CMMO-ST-C5-1-DION	1512317
		IO-Link® interface	PNP	CMMO-ST-C5-1-LKP	1512320

FESTO

Accessories

Assortment of plugs

Description	Type	Part no.
For CMMO-ST-...-DIOP/-DION	NEKM-C-10[1]	576005
For CMMO-ST-...-LKP	NEKM-C-14[1]	2948940

1) Plugs are included in the scope of delivery of the plug-in card.

Manifold block

Description	Type	Part no.
For simple and clear wiring	NEFC-S1G25-C2W25-S7	8001371

Control cable

Cable length [m]	Type	Part no.
For I/O interface to any controller		
3.2	NEBC-S1G25-K-3.2N-LE25	8001373

Plugs

Description	Type	Part no.
For I/O interface to any controller, 25-pin Sub-D plug	NEFC-S1G25-C2W25-S6	8001372

Motor cable NEBM-S

For	Cable length [m]	Type	Part no.
Straight plug, min.bending radius: 62 mm, suitable for use with energy chains			
EPCO-16, ERMO-12/–16, EMMS-ST-28	1.5	NEBM-M12G8-E-1.5-Q5-LE6	1449600
	2.5	NEBM-M12G8-E-2.5-Q5-LE6	1449601
	5	NEBM-M12G8-E-5-Q5-LE6	1449602
	7	NEBM-M12G8-E-7-Q5-LE6	1449603
	10	NEBM-M12G8-E-10-Q5-LE6	1449604
Straight plug, min.bending radius: 62 mm, suitable for use with energy chains			
EPCO-25/–40, ELGR-35, ERMO-25/–32, EMMS-ST-42/–57	1.5	NEBM-S1G9-E-1.5-Q5-LE6	1450368
	2.5	NEBM-S1G9-E-2.5-Q5-LE6	1450369
	5	NEBM-S1G9-E-5-Q5-LE6	1450370
	7	NEBM-S1G9-E-7-Q5-LE6	1450371
	10	NEBM-S1G9-E-10-Q5-LE6	1450372
Angled plug, min.bending radius: 62 mm, suitable for use with energy chains			
EPCO-25/–40, ELGR-35, ERMO-25/–32, EMMS-ST-42/–57	1.5	NEBM-S1W9-E-1.5-Q5-LE6	1450736
	2.5	NEBM-S1W9-E-2.5-Q5-LE6	1450737
	5	NEBM-S1W9-E-5-Q5-LE6	1450738
	7	NEBM-S1W9-E-7-Q5-LE6	1450739
	10	NEBM-S1W9-E-10-Q5-LE6	1450740
Straight plug, min.bending radius: 80 mm, suitable for use with energy chains			
ELGR-45/–55, EMMS-ST-87	1.5	NEBM-S1G15-E-1.5-Q7-LE6	1450834
	2.5	NEBM-S1G15-E-2.5-Q7-LE6	1450835
	5	NEBM-S1G15-E-5-Q7-LE6	1450836
	7	NEBM-S1G15-E-7-Q7-LE6	1450837
	10	NEBM-S1G15-E-10-Q7-LE6	1450838
Angled plug, min.bending radius: 80 mm, suitable for use with energy chains			
ELGR-45/–55, EMMS-ST-87	1.5	NEBM-S1W15-E-1.5-Q7-LE6	1450943
	2.5	NEBM-S1W15-E-2.5-Q7-LE6	1450944
	5	NEBM-S1W15-E-5-Q7-LE6	1450945
	7	NEBM-S1W15-E-7-Q7-LE6	1450946
	10	NEBM-S1W15-E-10-Q7-LE6	1450947

Encoder cable NEBM-M12

For	Cable length [m]	Type	Part no.
Straight plug, min.bending radius: 68 mm, suitable for use with energy chains			
EPCO-16/–25/–40, ELGR-35/–45/–55, ERMO-12/–16/–25/–32, EMMS-ST-28/–42/–57/–87	1.5	NEBM-M12G8-E-1.5-LE8	1451586
	2.5	NEBM-M12G8-E-2.5-LE8	1451587
	5	NEBM-M12G8-E-5-LE8	1451588
	7	NEBM-M12G8-E-7-LE8	1451589
	10	NEBM-M12G8-E-10-LE8	1451590
Angled plug, min.bending radius: 68 mm, suitable for use with energy chains			
EPCO-25/–40, ERMO-25/32, EMMS-ST-42/–57/–87	1.5	NEBM-M12W8-E-1.5-LE8	1451674
	2.5	NEBM-M12W8-E-2.5-LE8	1451675
	5	NEBM-M12W8-E-5-LE8	1451676
	7	NEBM-M12W8-E-7-LE8	1451677
	10	NEBM-M12W8-E-10-LE8	1451678

FESTO

- No step losses and high running performance thanks to closed-loop control in servo-lite operation
- Reliable position and torque control in servo-lite operation for motors with integrated encoder
- Path interpolation, master/slave synchronisation and Safe Torque Off safety function permit flexible and cost-efficient drive solutions
- SD card backup for fast recommissioning and convenient firmware upgrades and downgrades

Order code

001		002		003		004		005
CMMS	–	ST	–	C8	–	7	–	G2

Legend: [ ] Mandatory entry

001	Type
CMMS	Motor controller, standard

002	Motor technology
ST	Stepper motor

003	Nominal current
C8	8 A

004	Input voltage
7	48 V DC

005	Generation
G2	Second generation

Ordering

003 Nominal current	004 Input voltage	Nominal voltage		Interfaces	Type	Part no.
		Load	Logic			
8 A	48 V DC	24 … 48 V DC	DC 24 V	– I/O interface – CANopen – PROFIBUS – DeviceNet®	CMMS-ST-C8-7-G2	572211

Accessories

Plug-in cards

Description	Type	Part no.
Interface module for PROFIBUS interface	CAMC-PB	547450
Interface module for DeviceNet® interface	CAMC-DN	547451
Memory card, for data backup and firmware download	CAMC-M-S-F10-V1	1436343

Cables

Cable length [m]	Type	Part no.
Control cable for I/O interface to any controller		
2.5	NEBC-S1G25-K-2.5N-LE26	552254
Programming cable		
1.5	PS1-ZK11-NULLMODEM-1,5M	160786

Plugs

Description	Type	Part no.
Encoder plug	NECC-A-S-S1G9-C2M	564264
Plug for PROFIBUS interface		
Sub-D, 9-pin, IP40	FBS-SUB-9-WS-PB-K	533780
Plug for CANopen interface		
Sub-D, 9-pin, IP40	FBS-SUB-9-WS-CO-K	533783
Plug for DeviceNet® interface		
Screw connector, 2 x 5-pin	FBSD-KL-2X5POL	525635

Assortment of plugs

Description	Type	Part no.
For power supply, motor connection and safety function	NEKM-C-1[1]	547452

1) Plugs are included in the scope of delivery of the motor controller.

Power supply unit

Description	Type	Part no.
Output voltage 24 V DC, output current 5 A	CACN-3 A-1-5	2247681
Output voltage 24 V DC, output current 10 A	CACN-3 A-1-10	2247682
Output voltage 48 V DC, output current 5 A	CACN-3 A-7-5	2247683
Output voltage 48 V DC, output current 10 A	CACN-3 A-7-10	2247684
Output voltage 48 V DC, output current 20 A	CACN-11 A-7-20	2247685

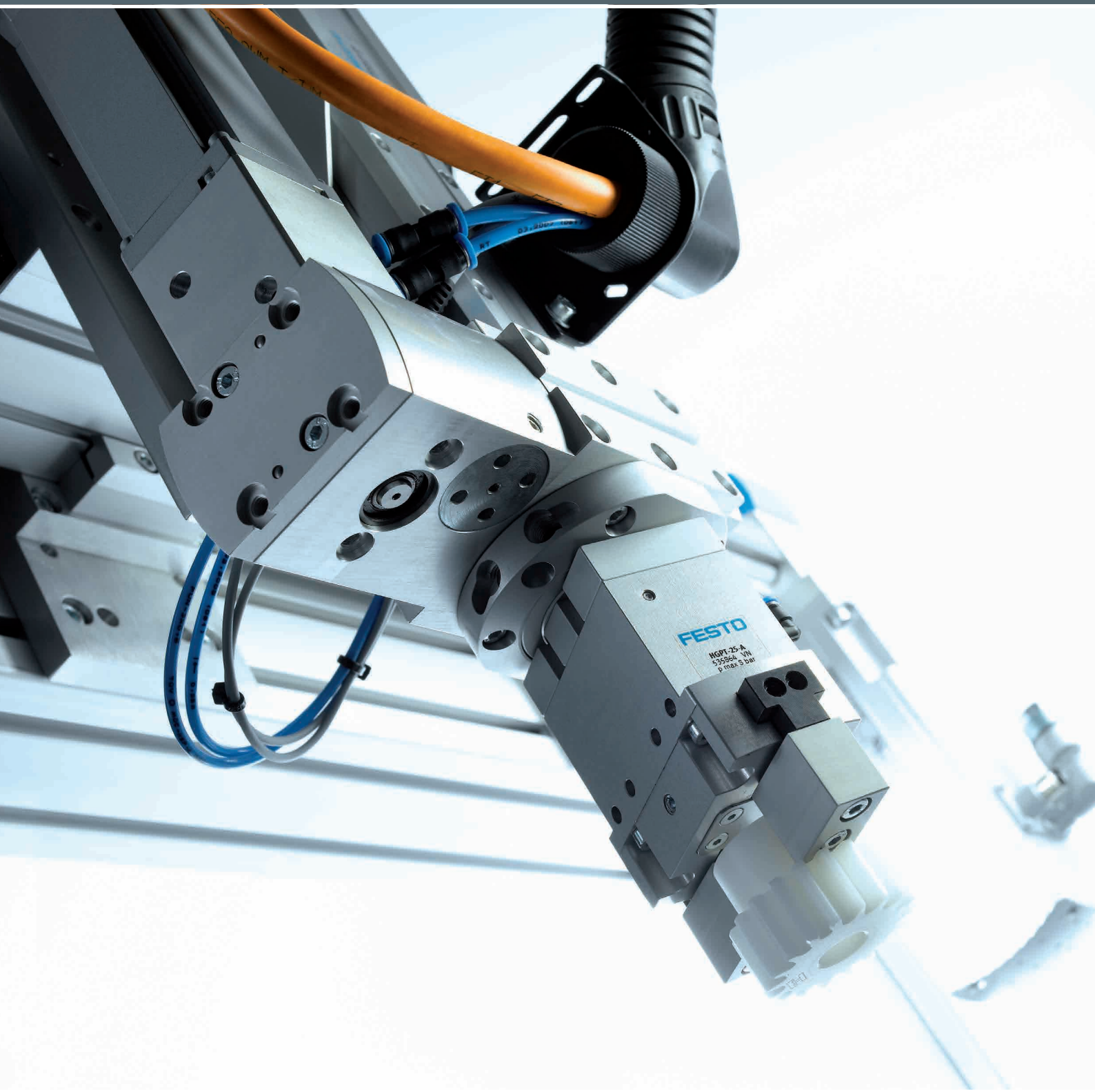

Grippers

04

Highlights

DHPS

Parallel grippers

+ Heavy-duty, precision T-slot guide for gripper jaws
+ High gripping force with compact size

Page 97

DHWS

Angle grippers

+ Improved gripper jaw guide (link guided movement)
+ Internal fixed flow control, does away with the need for external flow control in 90% of applications

Page 98

Contents

Product overview 97

FESTO

Software tool

Product finder for grippers		A secure grip is a question of the right calculation. In this case, calculation of weight, direction of movement, distances, etc. The software tool immediately determines which type of gripper – parallel, three-point, angle or swivel/gripper – and which size best matches your requirements.	This tool can be found • on our website at www.festo.com/catalogue by clicking on the blue button “Engineering”

Parallel grippers

	 Parallel grippers DHPS	 Parallel grippers hgpt	 Parallel grippers HGPL-B
Total gripping force at 6 bar, closing	25 … 910 N	106 … 6300 N	158 … 2742 N
Stroke per gripper jaw	2 … 12.5 mm	1.5 … 25 mm	20 … 150 mm
Position sensing	Via Hall sensor, via proximity sensor	Via proximity sensor	Via proximity sensor
Gripping force backup	During closing, during opening	During closing, during opening	
Description	• Heavy-duty, precision T-slot guide for gripper jaws • High gripping force with compact size • Max. repetition accuracy • Wide range of options for mounting on drives	• Sturdy and powerful • With T-slot guide • Suitable for external and internal gripping • Gripper jaw guide protected by sealing air against dust • High-force variant available	• Space-saving, high forces and torques • Controlled, precise and centred gripping • Long stroke: long guide length for the gripper jaws • Suitable for external and internal gripping • Opening stroke can be adjusted to optimise time
➔ Page/online	dhps	hgpt	hgpl

Three-point grippers

	 Three-point grippers DHDS	 Three-point grippers HGDT
Total gripping force at 6 bar, closing	87 … 750 N	207 … 2592 N
Stroke per gripper jaw	2.5 … 6 mm	1.5 … 10 mm
Position sensing	Via Hall sensor, via proximity sensor	Via proximity sensor
Gripping force backup	During closing	During closing, during opening
Description	• Heavy-duty, precision T-slot guide for gripper jaws • High gripping force with compact size • Max. repetition accuracy • Wide range of options for mounting on drives	• Synchronous movement of the gripper jaws • With T-slot guide • Suitable for external and internal gripping • Gripper jaw guide protected by sealing air against dust • High-force variant (F) available
➔ Page/online	dhds	hgdt

FESTO

Angle grippers

	 Angle grippers DHWS
Total gripping torque at 6 bar, closing	30 ... 1362 Ncm
Max. opening angle	40°
Position sensing	Via Hall sensor, via proximity sensor
Gripping force backup	During closing
Description	• Improved gripper jaw guide • Link guided movement • Internal fixed flow control, does away with the need for external flow control in 90% of applications • Max. repetition accuracy • Wide range of options for mounting on drives
➔ **Page/online**	**dhws**

4

Radial grippers

	 Radial grippers DHRS
Total gripping torque at 6 bar, closing	15 ... 660 Ncm
Max. opening angle	180°
Position sensing	Via Hall sensor, via proximity sensor
Description	• Lateral gripper jaw support for high torque loads • Self-centring • Gripper jaw centring options • Maximum repetition accuracy
➔ **Page/online**	**dhrs**

FESTO

Software tool

Feed separators	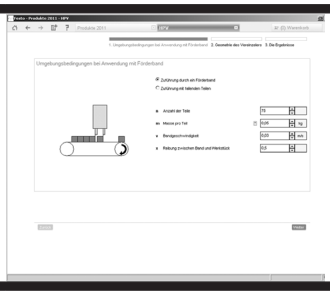	This tool helps you to select the right separator of the type HPV from Festo for your application. Let yourself be guided by the program – enter the general parameters and you will receive at least one suggestion for the product best suited to your application.	This tool can be found • on our website at www.festo.com/catalogue by clicking on the blue button “Engineering”

Feed separators

	 Feed separators HPVS	 Feed separators HPV
Mode of operation	Double-acting	Double-acting
Piston diameter	10 mm, 14 mm, 22 mm	10 mm, 14 mm, 22 mm
Stroke	10 … 60 mm	10 … 60 mm
Theoretical force at 6 bar, advancing	45 … 225 N	45 … 225 N
Description	• Version with one plunger • With non-rotating piston rod • Proximity sensor SME/SMT-8 can be integrated in the housing	• Version with two plungers • With twin piston, non-rotating piston rod and locking mechanism • Cost-effective: replaces at least two drives in the feed process • Proximity sensor SME/SMT-8 can be integrated in the housing
➔ **Page/online**	**hpvs**	**hpv**

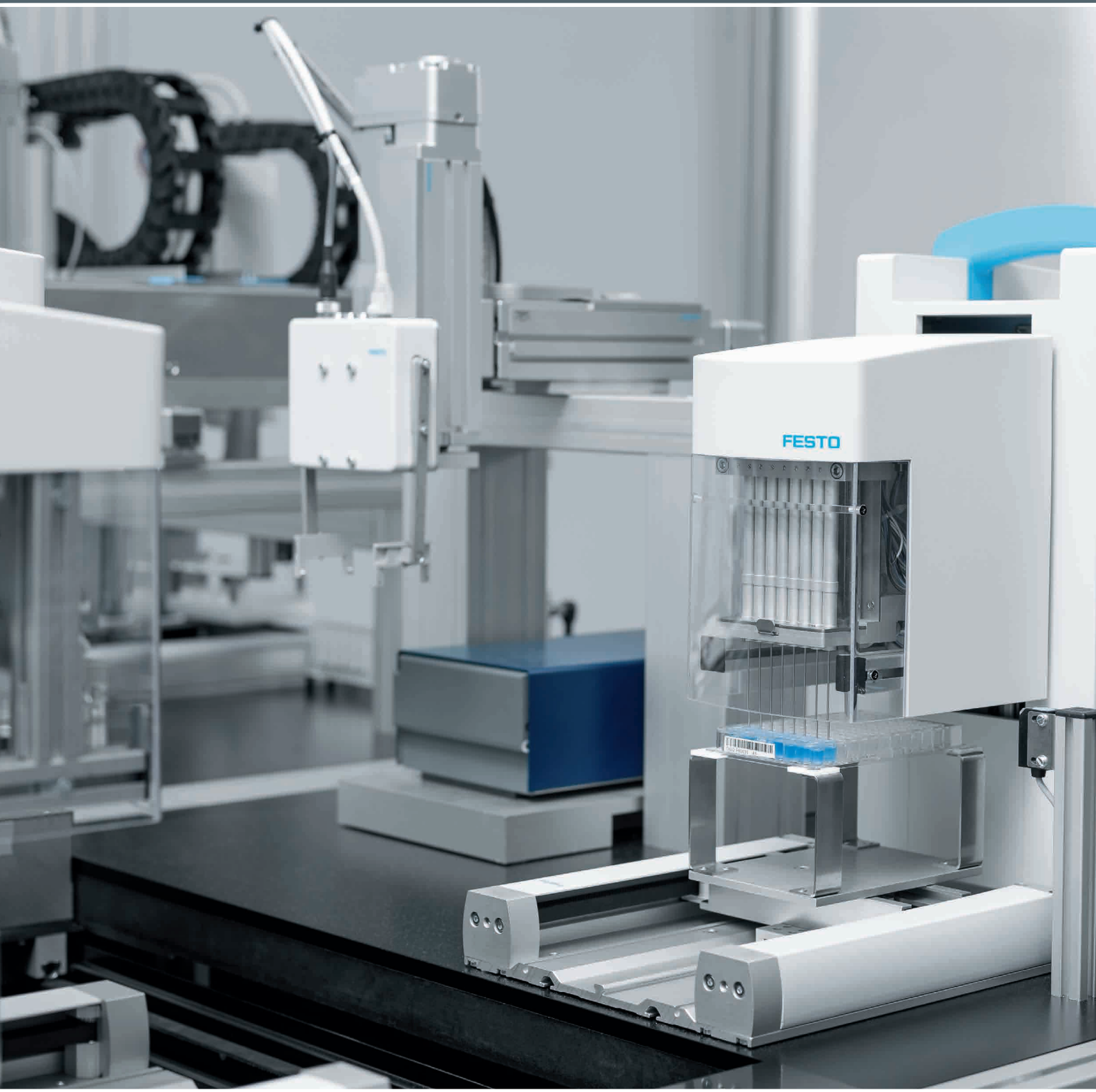

Handling systems

05

Highlights

HGO

Handling Guide Online

+ Configuration and ordering system for standard handling systems of the YXC... series
+ Economical and safe

Page 103

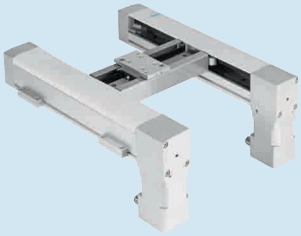

EXCM

Planar surface gantries

+ Compact gantry
+ Perfectly matched drive and controller packages

Page 103

EXCH

Planar surface gantries

+ Maximum working space coverage
+ Low moving mass
+ High payload

Page 103

Contents

Product overview 103

FESTO

Software tool

Engineering Tool: Handling Guide Online (HGO)	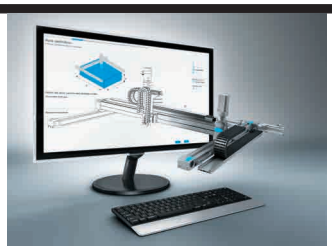	Planning and designing complex handling systems, e. g. for pick & place applications, generally takes a lot of time. With the innovative Handling Guide Online (HGO) you can design a tailor-made system in just a few steps, simply using your application data such as the load mass, travel and cycle time.	**Advantages:** • 1D- ... 3D kinematics • Tailor-made system solution within just a few minutes • CAD model available immediately • Fully automatic selection of all relevant components • Fully automated processing including ordering function • Fully assembled or partly assembled systems This tool is integrated in the Festo online catalogue or can be called up directly at ➔ www.festo.com/handling-guide

Cartesian systems

	 2D Planar surface gantries YXCF	 2D Planar surface gantries EXCM	 2D Planar surface gantries EXCH
Description	• Can be used universally for handling light to heavy workpieces or high payloads • Especially suitable for very long strokes • High mechanical rigidity and sturdy design • Freely positionable; any intermediate positions	• Excellent functionality in confined spaces • Low moving mass • Actuation via two stepper motors with integrated optical encoder and two-axis controller • With recirculating ball bearing guide	• Optimal dynamic response when compared with other Cartesian gantry systems • Drive concept with low moving dead weight • Flat system design • High acceleration in both axial directions
➔ **Page/online**	yxcf	excm	exch

5

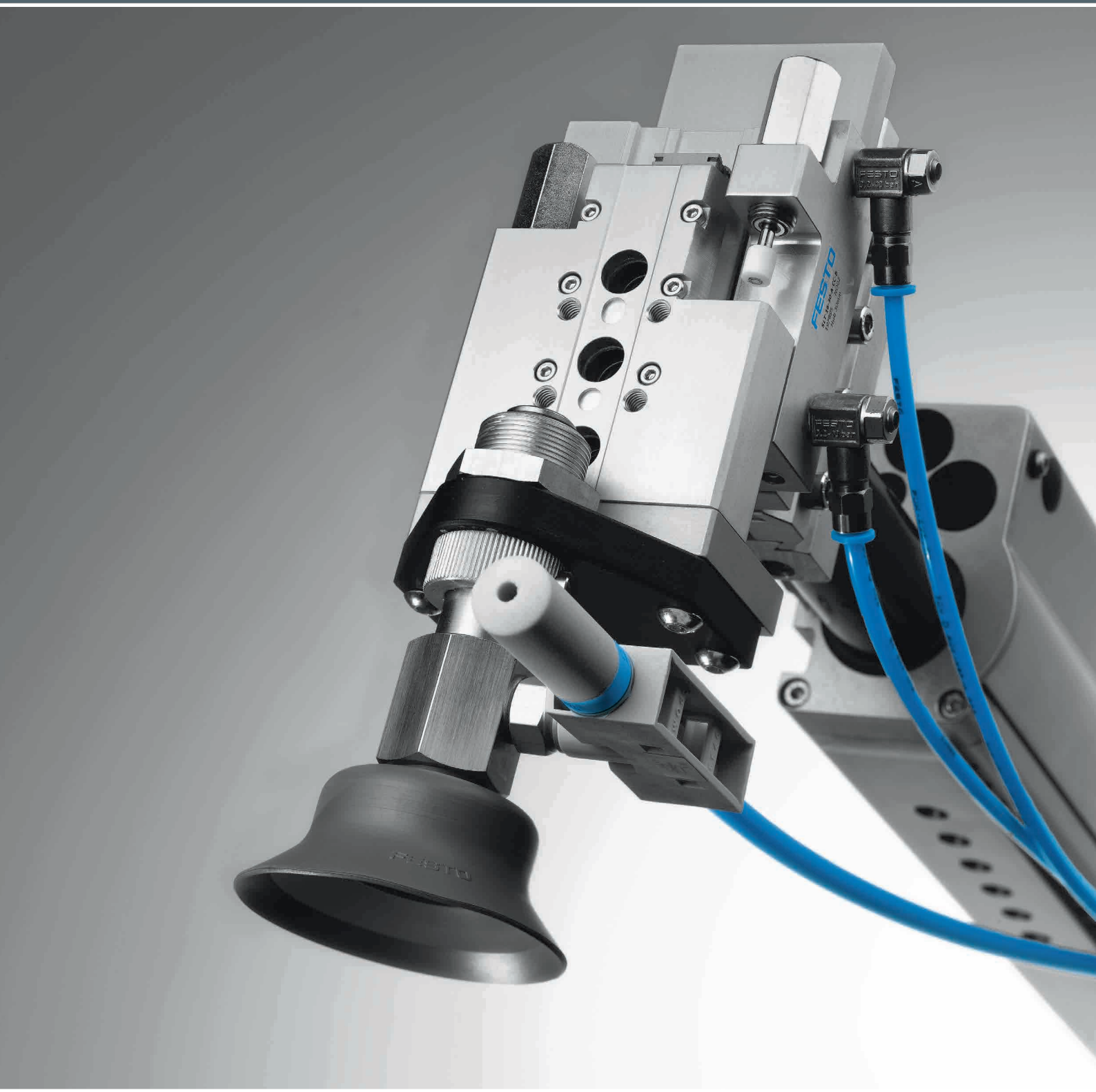

Vacuum technology

06

Highlights

OVEM

Vacuum generators

+ Compact design
+ Monitoring with vacuum sensor

Page 109

Contents

Product overview 107
Vacuum generators OVEM 109
Vacuum generators VN. 111
Suction grippers ESG – Overview. 113

FESTO

Software tool

Vacuum selection	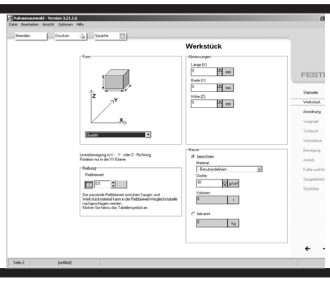	Which suction cup for which surface and which movement? Don't experiment – calculate! This software tool even enables a differentiation to be made between linear and rotary movements.	This tool can be found • on our website at www.festo.com/catalogue by clicking on the blue button "Engineering"

Vacuum generators

	 Vacuum generators OVEM	 **Vacuum generators, pneumatic VN**	 **Vacuum generators VAD**	 **Vacuum generators VAK**
Nominal width of laval nozzle	0.45 … 2 mm	0.45 … 3 mm	0.5 … 1.5 mm	1 mm
Ejector characteristic	Standard, high suction rate, high vacuum	Inline, standard, high suction rate, high vacuum, high partial vacuum, high suction volume	High vacuum	High vacuum
Integrated function	Electric ejector pulse valve, flow control valve, electric on-off valve, filter, electric air saving function, check valve, open silencer, vacuum switch	Pneumatic ejector pulse valve, open silencer, vacuum switch		Ejector pulse, pneumatic
Max. vacuum	93%	86 … 93%	80%	80%
Max. suction rate with respect to atmosphere	6 … 86.5 l/min	6.1 … 339 l/min		
Description	• Compact design • Monitoring with vacuum sensor with IO-Link® • Central electrical connection via an M12 plug • Maintenance-free operation and reduced noise level through an integrated, open silencer • Integrated filter with inspection window • Optionally with air-saving function and LCD display • Adjustable ejector pulse	• Can be used directly in the work space • Available as straight type (in-line: vacuum port in line with the supply port) or T-shape (standard: vacuum port at 90° to the supply port) • Compact and cost-effective • Maintenance-free operation and reduced noise level through an integrated, open silencer	• Sturdy aluminium housing	• Sturdy aluminium housing • Ejector pulse through built-in reservoir • Connection for external reservoir
➔ Page/online	**109**	**111**	**vad**	**vak**

6

FESTO

Vacuum gripping technology

	Suction cups ESV	Suction cups VAS, VASB	Suction cups ESS
Suction cup size			10x30 mm, 15x45 mm, 20x60 mm, 25x75 mm, 30x90 mm, 4x10 mm, 4x20 mm, 6x10 mm, 6x20 mm, 8x20 mm, 8x30 mm
Suction cup diameter	20 … 200 mm	2 … 125 mm	2 … 200 mm
Holding force at nominal operating pressure	8.2 … 1610 N	0.14 … 700 N	0.1 … 1610 N
Design	Bell-shaped or round bellows	Vacuum port on top, vacuum port on the side, round, bellows 1.5 times, round, flat	Round, bell-shaped
Information on materials - Suction cup	BR, FPM, NBR, PUR, VMQ (silicone), Vulkollan®	NBR, PUR, TPE-U (PU), VMQ (silicone)	BR, FPM, NBR, PUR, VMQ (silicone), Vulkollan®
Description	• Wearing part for suction cup • Easily interchangeable • Suction cup volume: 0.318 … 245 cm³ • Min. workpiece radius: 10 … 680 mm	• Sturdy and reliable • Suction cup with fixed connecting thread • 11 suction cup diameters • Round suction cup shape, bellows • Vacuum port on top, on the side • Screw-in thread	• Suction cup consisting of the suction cup itself, plus the support plate with mounting • Suction cup volume: 0.002 … 245 cm³ • Min. workpiece radius: 10 … 680 mm • Mounting for suction cup holder: female thread, male thread, push-in connector
➔ Page/online	esv	vas	ess

6

Vacuum generators OVEM

FESTO

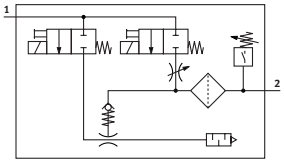

- Integrated monitoring of process parameters
- Space-saving with a wide range of configuration options
- Integrated check valve to prevent pressure drop
- 4 performance classes
- Integrated solenoid valves to control the compressed air supply and the ejector pulse
- Easy to use and maintain
- Simple installation via QS fittings and M12 plugs
- IP65 degree of protection

Order code

001	002	003	004	005	006	007	008
OVEM		H	B	QO	CE	N	

Legend: Mandatory entry

001	Type
OVEM	Vacuum generator with solenoid valve for vacuum

002	Nominal width of laval nozzle
05	0.45 mm
07	0.7 mm
10	0.95 mm
14	1.4 mm
20	2.0 mm

003	Ejector characteristic
H	High vacuum

004	Housing size/width
B	Grid dimension 20 mm

005	Pneumatic connections
QO	Supply port (P): QS fitting Vacuum port (V): QS fitting Exhaust port (R): open silencer

006	Normal position of the vacuum generator
CE	NC, normally closed (no vacuum generation) with ejector pulse

007	Electrical connection
N	Plug M12 (5-pin)

008	Vacuum switch, electrical switching output
1P	1 switching output 1xPNP
2P	2 switching outputs 2xPNP

Product options

- H High vacuum
- L High suction rate
- QO P-V with QS fitting, R with open silencer
- QS P-V-R with QS fitting
- GN P-V-R with female thread
- GO P-V with female thread, R with open silencer
- PL Prepared for common supply manifold, V-R with QS fitting
- PO Prepared for common supply manifold, V with QS fitting, R with open silencer
- ON NO, normally open (vacuum generation)
- OE NO, normally open (vacuum generation) with ejector pulse
- CN NC, normally closed (no vacuum generation)
- CE NC, normally closed (no vacuum generation) with ejector pulse
- 1N 1 switching output 1x NPN
- 2N 2 switching outputs 2x NPN
- PU 1 switching output 1x PNP + U
- PI 1 switching output 1x PNP + I
- NU 1 switching output 1x NPN + U
- NI 1 switching output 1x NPN + I
- H Alternative vacuum display inch Hg

Ordering – Product options

Configurable product

This product and all its product options can be ordered using the configurator.

The configurator can be found under Products at
➔ **www.festo.com/catalogue/...**

Enter the type or the configuration part number in the search field.

FESTO

Ordering – Basic design

002 **Nominal width of laval nozzle [mm]**	Type	Part no.	Type	Part no.
	008 1 switching output 1xPNP		008 2 switching outputs 2xPNP	
0.45	OVEM-05-H-B-QO-CE-N-1P	540021	OVEM-05-H-B-QO-CE-N-2P	538831
0.7	OVEM-07-H-B-QO-CE-N-1P	540022	OVEM-07-H-B-QO-CE-N-2P	538832
0.95	OVEM-10-H-B-QO-CE-N-1P	540023	OVEM-10-H-B-QO-CE-N-2P	538833
1.4	OVEM-14-H-B-QO-CE-N-1P	540024	OVEM-14-H-B-QO-CE-N-2P	539997
2.0	OVEM-20-H-B-QO-CE-N-1P	8023699	OVEM-20-H-B-QO-CE-N-2P	8023700

Accessories

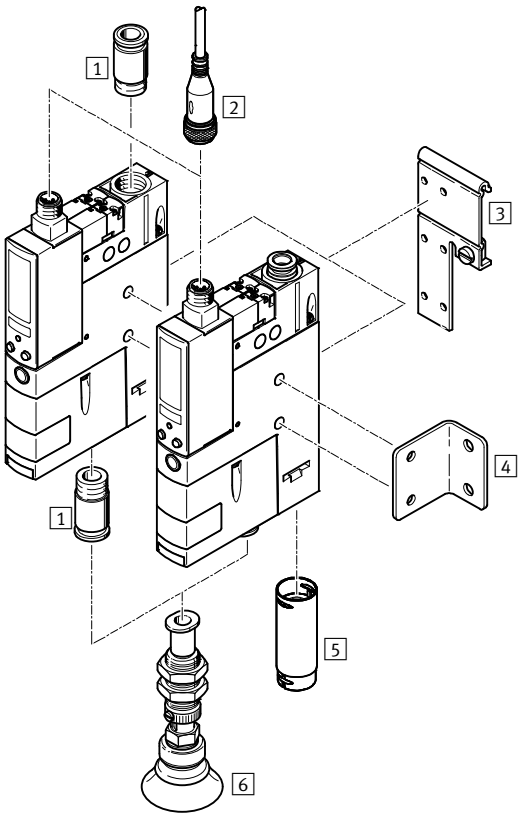

1 Push-in fitting QS ➔ 212
2 Connecting cable NEBU-M12G5 ➔ 110
3 H-rail mounting OABM-H ➔ oabm-h
4 Mounting bracket HRM-1 ➔ hrm-1
5 Silencer extension UOMS-1/4 ➔ 110
6 Suction gripper ESG ➔ esg

2 **Connecting cable NEBU**

Description	Cable length	Type	Part no.
M12x1, 5-pin	2.5 m	NEBU-M12G5-K-2.5-LE5	541330
	5 m	NEBU-M12G5-K-5-LE5	541331

5 **Silencer extension UOMS**

Description	Type	Part no.
For vacuum generators OVEM-07/10/14	UOMS-1/4	538436

FESTO

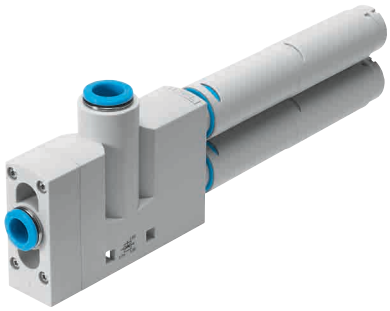

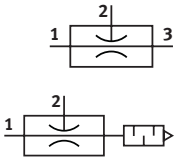

- High vacuum levels of up to 93%
- Easy connection of holders and suction cups
- Lightweight and compact design thanks to plastic housing
- No wearing parts, long service life
- Vacuum monitoring via vacuum switch
- Low environmental impact due to silencers

Order code

001		002		003		004	005		006		007		008
VN	–		–	H	–	T		–		–		–	

Legend: [ ] Mandatory entry

001	Type
VN	Vacuum generator, pneumatic

002	Nominal width of laval nozzle
05	0.45 mm
07	0.7 mm
10	0.95 mm
14	1.4 mm
20	2.0 mm
30	3.0 mm

003	Ejector characteristic
H	High vacuum/standard

004	Design
T	T-shape

005	Size
2	Grid dimension: 10 mm
3	Grid dimension: 14 mm
4	Grid dimension: 18 mm
6	Grid dimension: 24 mm

006	Supply port (P)
PQ1	Push-in connector 4 mm
PQ2	Push-in connector 6 mm
PQ4	Push-in connector 10 mm

007	Vacuum port (V)
VQ1	Push-in connector 4 mm
VQ2	Push-in connector 6 mm
VQ3	Push-in connector 10 mm
VQ5	Push-in connector 12 mm

008	Exhaust port (R)
RQ1	Push-in connector 4 mm
RO1	Silencer type UO, open
RO2	Silencer type UOM, open

Product options

Ejector characteristic:
- L High suction rate/standard
- M High vacuum/inline
- N High suction rate/inline

Housing type:
- I2 Straight, grid dimension 10 mm
- I3 Straight, grid dimension 13 mm

Connection options:
- Female thread
- Male thread
- Push-in sleeve

Ordering – Product options

Configurable product

This product and all its product options can be ordered using the configurator.

The configurator can be found under Products at
→ **www.festo.com/catalogue/...**

Enter the type or the configuration part number in the search field.

FESTO

Ordering – Basic design

002 **Nominal width of laval nozzle [mm]**	004 **Design,** 005 **Size**	007 **Vacuum port (V)**	Type	Part no.
0.45	T2, grid dimension 10 mm	QS4	VN-05-H-T2-PQ1-VQ1-RQ1	526100
0.7	T2, grid dimension 10 mm	QS4	VN-07-H-T2-PQ1-VQ1-RQ1	526101
0.95	T3, grid dimension 14 mm	QS6	VN-10-H-T3-PQ2-VQ2-RO1	193490
1.4	T4, grid dimension 18 mm	QS8	VN-14-H-T4-PQ2-VQ3-RO2	547707
2.0	T6, grid dimension 24 mm	QS12	VN-20-H-T6-PQ4-VQ5-RO2	193495
3.0	T6, grid dimension 24 mm	QS12	VN-30-H-T6-PQ4-VQ5-RO2	193497

Accessories

VN-05/07/10/14

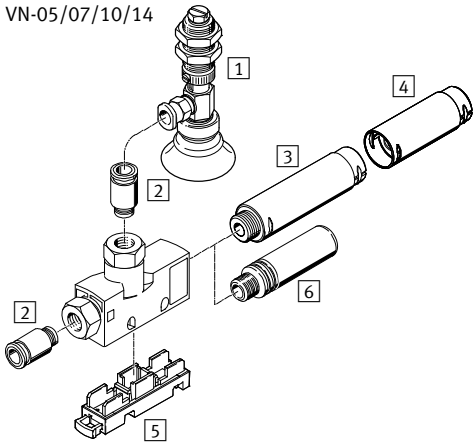

VN-20/30

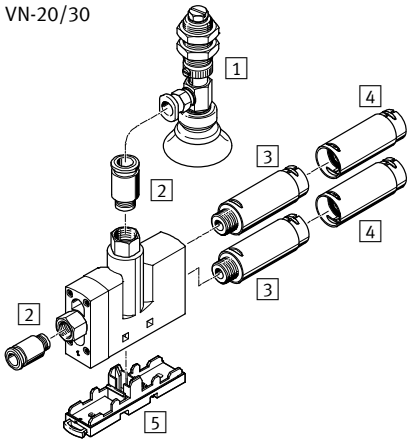

1 Suction gripper ESG (complete solution) ➔ 113
Suction cup holder ESH with suction cup ESS (individual components) ➔ 113
2 Push-in fitting QS ➔ 212
3 Silencer UOM ➔ 112
4 Silencer extension UOMS ➔ 112
5 Mounting plate VN-T ➔ 112
6 Silencer UO ➔ uo

3 **Silencer UOM**

Pneumatic connection	Type	Part no.
G¼	UOM-1/4	538432
G⅜	UOM-3/8	538433

4 **Silencer extension UOMS**

For silencer	Type	Part no.
UOM-1/4	UOMS-1/4	538436
UOM-3/8	UOMS-3/8	538437

5 **Mounting plate VN-T**

For housing type	Type	Part no.
T2	VN-T2-BP-NRH	196951
T3	VN-T3-BP-NRH	193641
T4	VN-T4-BP-NRH	195279
T6	VN-T6-BP-NRH[1)]	196956

1) Horizontal wall mounting not permissible.

Suction grippers ESG – Overview

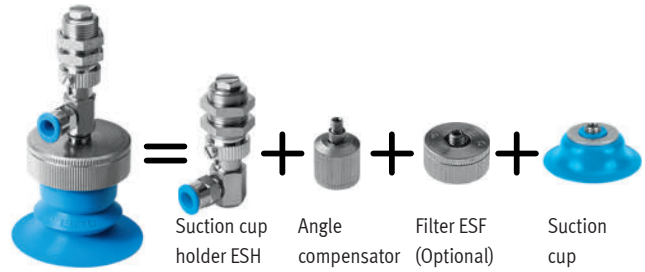

- Any combination of suction cup holder ESH and suction cup with connection attachments ESS is possible in the same holder size
- 15 different suction cup diameters from 2 … 200 mm
- 6 different suction cup materials
- 6 different suction cup shapes

- 14 different suction cup holders ESH
- Suitable for a wide variety of temperature ranges and workpiece surfaces

Product options

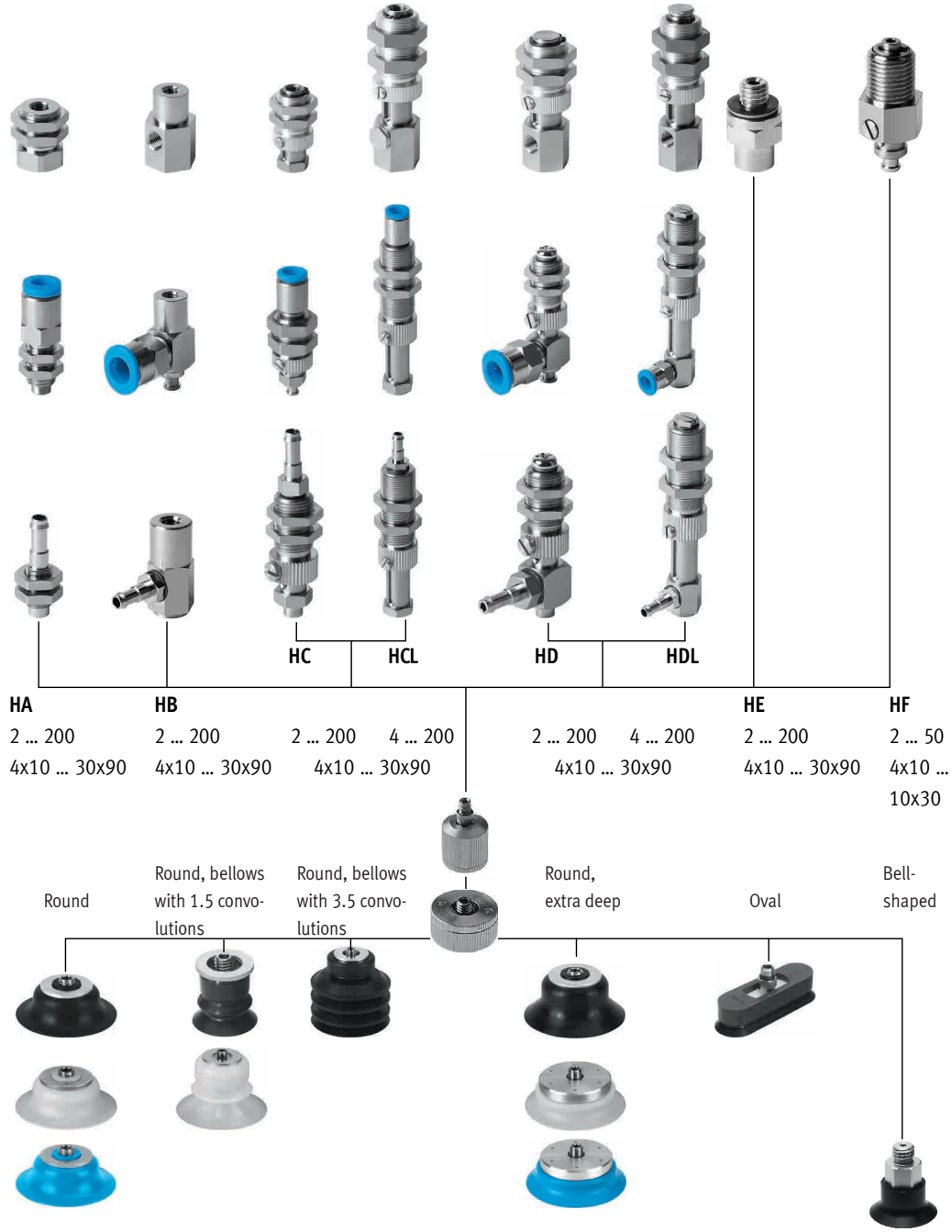

Suction cup holder ESH → esh

Threaded connection G
for suction cup diameter 60 … 200 mm
for suction cup size 15x45 … 30x90 mm

Push-in connector QS
for suction cup diameter 2 … 50 mm
for suction cup size 4x10 … 10x30 mm

Barbed fitting connection PK
for suction cup diameter 2 … 50 mm
for suction cup size 4x10 … 10x30 mm

Holder types
for suction cup diameter [mm]
for suction cup size [mm]

Angle compensator ESWA → eswa

Filter ESF → esf

Suction cup ESS → ess
Nitrile rubber (NBR)
Silicone (SI)
Polyurethane (PU)
Vulkollan® (GT/BT)

Ordering

Configurable product

This product and all its product options can be ordered using the configurator.

The configurator can be found under Products at
→ **www.festo.com/catalogue/...**

Enter the type or the configuration part number in the search field.

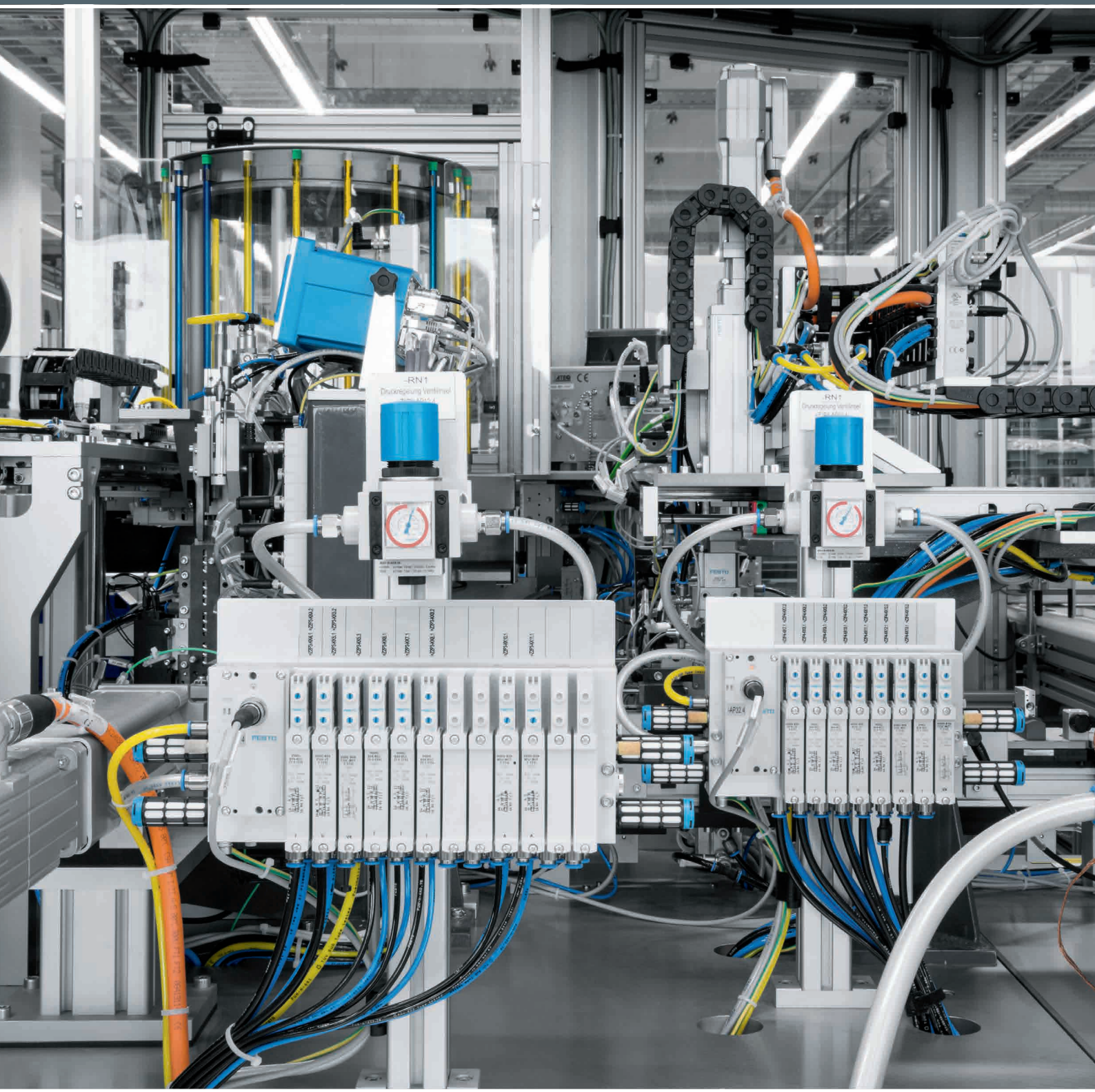

Valves

07

Highlights

VUVS

Universal directional control valves

+ Piston spool with sealing cartridge (VUVS-L) or sealing ring (VUVS-LK)
+ Can be used as an individual valve or manifold valve VTUS

Page 132

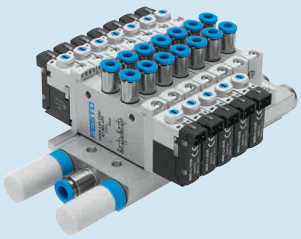

VUVG

Universal directional control valves

+ Universal valve, sturdy and durable
+ Can be used as an individual valve or manifold valve VTUG

Page 136

HGL

Piloted check valves

+ Manually actuated exhaust possible with separate accessories
+ Pneumatically piloted

Page 144

Contents

Product overview 117
Solenoid valves VSNC, NAMUR 125
Solenoid valves VSVA, to ISO 5599-1 128
Solenoid valves VSVA, to ISO 15407-1 130
Solenoid valves VUVS 132
Solenoid valves VUVG 136
Hand lever valves VHER 141
Pushbutton valves VHEM-P 143
Piloted check valves HGL 144
Hand slide valves VBOH. 145
One-way flow control valves VFOF 146
One-way flow control valves GRLA, GRLZ 147

FESTO

Standards-based directional control valves

	Solenoid valves **VSNC**	**Solenoid valves with central plug** **VSVA-R5**	**Solenoid valves with individual plug** **VSVA-C1**
Actuation type	Electrical	Electrical	Electrical
Pneumatic connection 1	G1/4, NPT 1/4-18	Sub-base size 1 to ISO 5599-1, size 2 to ISO 5599-1	Sub-base size 18 mm to ISO 15407-1, size 26 mm to ISO 15407-1
Standard nominal flow rate	800 … 1350 l/min	400 … 2800 l/min	400 … 1400 l/min
Valve function	5/2-way, double solenoid, 5/2 or 3/2-way, convertible, 5/3-way, pressurised, 5/3-way, exhausted, 5/3-way, closed	5/2-way, double solenoid, 5/2-way, double solenoid, dominant, 5/2-way, single solenoid, 5/3-way, closed, 5/3-way, exhausted, 5/3-way, pressurised, 2x3/2-way, single solenoid, closed, 2x3/2-way, single solenoid, open/ closed, 2x3/2-way, single solenoid, open	5/2-way, double solenoid, 5/2-way, double solenoid, dominant, 5/2-way, single solenoid, 5/3-way, closed, 5/3-way, exhausted, 5/3-way, pressurised, 2x3/2-way, single solenoid, closed, 2x3/2-way, single solenoid, open/ closed, 2x3/2-way, single solenoid, open
Electrical connection	3-pin, type B, to industry standard (11 mm), plug, to EN 175301-803	3-pin, 4-pin, M12x1, M8x1, round design, central plug	Type C, with protective earth conductor, to DIN EN 175301803, without protective earth conductor
Description	• NAMUR interface • Rotatable seal for 3/2 or 5/2-way valve • Wide choice of EX solenoid systems • Sturdy and powerful • Extended temperature range • Outstanding value for money	• Corresponds to ISO 5599-1 • Electrical connection via central plug • Robust metal housing • Manifold assembly with mixture of sizes possible	• Corresponds to ISO 15407-1 and to ISO 15218 for pilot valve with interface • Electrical connection via type C plug • Robust metal housing • Manifold assembly with mixture of sizes possible
➔ Page/online	**125**	**128**	**130**

FESTO

Universal directional control valves

	Solenoid valves VUVS	**Solenoid valves, plug-in VUVG**	**Solenoid valves, for individual connection VUVG**	**Solenoid valves, pneumatic valves, Tiger Classic MFH, MOFH, JMFH, JMFDH, VL/O, VL, JH, JDH**
Actuation type	Electrical	Electrical	Electrical	Electrical, pneumatic
Pneumatic connection 1	G1/8, G1/4, G3/8		G1/4, G1/8, M3, M5, M7	G1/8, G1/4, G3/8, G1/2, G3/4, NPT1/8-27
Pneumatic working port	G1/4, G1/8, G3/8, NPT1/4-18, NPT1/8-27, QS-1/4, QS-10, QS-12, QS-3/8, QS-4, QS-5/16, QS-5/32, QS-6, QS-8	G1/4, G1/8, M5, M7, flange	G1/4, G1/8, M3, M5, M7, QS-1/4, QS-1/8, QS-10, QS-3, QS-3/16, QS-3/8, QS-4, QS-5/16, QS-5/32, QS-6, QS-8, flange	G1/8, G1/4, G3/8, G1/2, G3/4
Standard nominal flow rate	600 … 2400 l/min	130 … 1200 l/min	90 … 1380 l/min	500 … 7500 l/min
Valve function	3/2-way, single solenoid, closed, 3/2-way, single solenoid, open, 5/2-way, double solenoid, 5/2-way, single solenoid, 5/3-way, pressurised, 5/3-way, exhausted, 5/3-way, closed	2x3/2-way, single solenoid, closed, 2x3/2-way, single solenoid, open, 2x3/2-way, single solenoid, open/closed, 3/2-way, single solenoid, closed, 3/2-way, single solenoid, open, 5/2-way, double solenoid, 5/2-way, single solenoid, 5/3-way, pressurised, 5/3-way, exhausted, 5/3-way, closed	2x3/2-way, single solenoid, closed, 2x3/2-way, single solenoid, open, 2x3/2-way, single solenoid, open/closed, 5/2-way, double solenoid, 5/2-way, single solenoid, 5/3-way, pressurised, 5/3-way, exhausted, 5/3-way, closed	3/2-way, single solenoid/monostable, closed, 3/2-way, single solenoid/monostable, open, 5/2-way, double solenoid/bistable, 5/2-way, double solenoid/bistable, dominant, 5/2-way, single solenoid/monostable, closed, 5/2-way, single solenoid/monostable, 5/3-way, pressurised, 5/3-way, exhausted, 5/3-way, closed
Electrical connection	Type B, type C, to EN 175301-803	Via sub-base	Plug, via E-box, connection pattern H, horizontal connection, M8x1 A-coded to EN 61076-2-104, 2-pin, 3-pin	Via F coil, to be ordered separately
Description	• Universal valve, sturdy and durable • Low-cost, no limitations with regard to performance • Can be used as individual valves or manifold valves VTUS	• Sub-base valve • For valve terminal VTUG plug-in	• Compact universal valve • Connection technology via electrical connection box (E-box) • High flow rate relative to its size • In-line valves can be used as individual valves or manifold valves	• Sturdy and reliable • Poppet valve • All-metal version • Principle with armature tube
➔ Page/online	**132**	**136**	**136**	**tiger classic**

7

FESTO

Application-specific directional control valves

	Solenoid valves VOFD	Solenoid valves VOFC	Solenoid valves MHE2, MHP2, MHA2, MHE3, MHP3, MHA3, MHE4, MHP4, MHA4	Fast-switching valves MHJ9, MHJ10
Design	Directly actuated poppet valve	Soft-switching piston valve, piloted piston poppet valve	Pressure-relieved poppet valve	Poppet valve without spring return
Valve function	3/2-way, single solenoid, closed	3/2-way, single solenoid, closed, 5/2-way, double solenoid, 5/2-way, single solenoid	3/2-way, single solenoid, closed, 3/2-way, single solenoid, open, 5/2-way, single solenoid	2/2-way, single solenoid, closed
Operating pressure	0 ... 12 bar	0 ... 8 bar	–0.9 ... 8 bar	0.5 ... 8 bar
Ambient temperature	–50 ... 60 °C	–25 ... 60 °C	–5 ... 60 °C	–5 ... 60 °C
Pneumatic connection 1	G1/4, NPT1/4-18, NAMUR port pattern	G1/2, G1/4, NPT1/4-18, port pattern to NAMUR	Sub-base, G1/4, G1/8, M7, QS-4, QS-6, QS-8	Sub-base, QS-4, QS-6
Standard nominal flow rate	49 ... 1888 l/min	766 ... 2686 l/min	90 ... 400 l/min	50 ... 160 l/min
Description	• Suitable for process automation, for applications in the chemical and petrochemical industries • Suitable for outdoor use under harsh, dusty ambient conditions • Especially suitable for quarter turn actuators thanks to NAMUR flange pattern • Variants with TÜV approval up to SIL4 acc. to IEC 61508	• Suitable for process automation, for applications in the chemical and petrochemical industries • Suitable for outdoor use under harsh, dusty ambient conditions • Especially suitable for quarter turn actuators thanks to NAMUR flange pattern • Valve can switch between internal and external pilot air • Variants with TÜV approval up to SIL3 acc. to IEC 61508	• Directly actuated poppet valve • Fast-switching valve: switching times down to 2 ms • Direct mounting, individual sub-base, manifold assembly • Manifold block for 2 ... 10 valves	• Directly actuated poppet valve • Individual valve with integrated QS fitting • Switching frequency up to 1000 Hz • Service life › 500 million switching cycles
➔ **Page/online**	vofd	vofc	mh2	mhj9

Manually actuated directional control valves: swivel lever valves

	Hand lever valves VHER
Valve function	4/3-way, exhausted, 4/3-way, closed, 4/3-way, pressurised
Type of control	Direct
Standard nominal flow rate	170 ... 3800 l/min
Pneumatic working port	G1/8, G1/4, G1/2, M5
Operating pressure	0 ... 10 bar
Description	• Lever in metal or polymer design • Front panel mounting, through holes or mounting holes
➔ **Page/online**	**141**

FESTO

Manually actuated directional control valves: pushbutton valves

	 Pushbutton valves **VHEM-P**
Valve function	5/2-way, bistable, 5/2-way, monostable, 3/2-way, monostable, closed, 3/2-way monostable, open
Type of control	Direct, piloted
Standard nominal flow rate	500 ... 1000 l/min
Pneumatic working port	G1/8, G1/4
Operating pressure	0.95... 10 bar
Description	• With button switch • Reverse operation possible
➔ Page/online	**143**

Check valves and quick exhaust valves

	 Check valves, piloted **HGL**
Pneumatic connection 1	G1/8, G1/4, G3/8, G1/2, M5, QS-4, QS-6, QS-8, QS-10, QS-12
Standard nominal flow rate 1->2 from 6 to 5 bar	130 ... 1600 l/min
Operating pressure	0.5 ... 10 bar
Description	• Valve function: piloted non-return function • Pneumatically piloted • Screw-in with male thread • Pilot air connection: M5, G1/8, G1/4, G3/8, QS-4
➔ Page/online	**144**

7

Ball valves and shut-off valves

	 Hand slide valves **VBOH**	 **Ball valves** **QH, QHS**
Valve function	3/2-way, bistable	2/2-way, bistable
Pneumatic connection 1	G1/8, G1/4, G1/2, G3/8, G3/4, M5	QS-4, QS-6, R1/8
Standard nominal flow rate	236 ... 7691 l/min	148 ... 560 l/min
Operating pressure	–0.95 ... 12 bar	–1 ... 10 bar
Description	• Used as a shut-off function for pressurising and exhausting compressed air systems, e. g. upstream of service unit combinations, for air guns and also for exhausting pneumatic cylinders • Non-overlapping, so no pressure losses when switching • Minimal installation	• Shut-off valve, manually operated • In-line installation, can be screwed in, bulkhead fitting • Variants: thread at both ends, push-in connector at both ends, thread/push-in connector
➔ Page/online	**145**	**qh**

FESTO

One-way flow control valves

	 One-way flow control valves **VFOF**	 **One-way flow control valves** **GRLA, GRLZ, CRGRLA, GRGA, GRGZ, GRLSA**
Valve function	Exhaust air one-way flow control function	Exhaust air one-way flow control function, one-way flow control function, supply air one-way flow control function
Pneumatic connection 1	QS-6, QS-8	G1/8, G1/4, G1/2, G3/8, G3/4, M3, M5, PK-3, PK-3 with union nut, PK-4, PK-4 with union nut, PK-6 with union nut, QS-3, QS-4, QS-6, QS-8, QS-10, QS-12
Standard nominal flow rate in flow control direction	250 … 650 l/min	0 … 4320 l/min
Adjusting element	Internal hexagon	Internal hexagon, knurled screw, slotted head screw
Description	• Minimal height • High flow rate • Can be rotated horizontally through 360° when mounted • Functional combination with one-way flow control valve and piloted non-return valve	• Flow control valve, flow control at one end • Polymer, metal or stainless steel design • Standard, mini, in-line variants with different flow rates • Functional combination with one-way flow control valve and piloted non-return valve • Connections: thread at both ends, push-in connector at both ends, thread/push-in connector
➔ Page/online	**146**	**147**

Proportional valves

	 Proportional pressure regulators **VPPM**	 **Proportional pressure regulators** **VPPE**
Valve function	3-way proportional pressure regulator	3-way proportional pressure regulator, 3-way proportional pressure regulator, closed
Pneumatic connection 1	Sub-base, G1/8, G1/4, G1/2	G1/8
Pressure regulation range	0.02 … 10 bar	0.02 … 10 bar
Standard nominal flow rate	380 … 7000 l/min	310 … 1250 l/min
Description	• Piloted pressure regulator • Multi-sensor control (cascade control) • Integration in valve terminal MPA • User interface with LED displays, LCD display, adjustment/selection buttons • Integrated pressure sensor • Electrical connection via plug, round design, 8-pin, M12 or terminal linking	• Piloted pressure regulator • Setpoint input as analogue voltage signal (0 … 10 V) • Electrical connection via M12x1 plug, 4-pin • Optionally with setpoint module
➔ Page/online	**vppm**	**vppe**

FESTO

Solenoid actuated process and media valves

	Solenoid valves VZWD	**Reverse jet pulse valves VZWE-E, VZWE-F**	**Solenoid valves VZWF**
Design	Directly actuated poppet valve	Angled version, straight version with flange, diaphragm valve	Diaphragm valve, force pilot operated
Actuation type	Electrical	Electrical	Electrical
Nominal width	1 … 6 mm	20 … 76 mm	13.5 … 50 m
Process valve connection	G1/8, G1/4, NPT1/4, NPT1/8		G1/4, G3/8, G1/2, G3/4, G1, G11/4, G11/2, G2
Process valve connection 1		G3/4, G1, G11/2, G2, G21/2, flange diameter 60 mm, 75 mm, 89 mm	
Temperature of medium	–10 … 80 °C	–20 … 60 °C	–10 … 80 °C
Medium pressure	0 … 90 bar	0.35 … 8 bar	0 … 10 bar
Flow rate Kv	0.06 … 0.4 m³/h	15 … 210 m³/h	1.8 … 28 m³/h
Description	• Large pressure range • Directly actuated poppet valve • No pressure difference required • Can also be used in vacuum technology	• High flow rates • For mechanically cleaning filters and dust filter systems • Fast opening and closing times • Sturdy pilot system	• High flow rates • Large nominal diameters with relatively small solenoids • No pressure difference required • Can also be used in vacuum technology
➔ Page/online	**268**	**vzwe**	**270**

Solenoid actuated process and media valves

	Solenoid valves VZWM	**Solenoid valves VZWP**
Design	Poppet valve with diaphragm seal	Piloted piston poppet valve
Actuation type	Electrical	Electrical
Nominal width	13 … 50 mm	13 … 25 m
Process valve connection	G1/4, G3/8, G1/2, G3/4, G1, G1 1/4, G1 1/2, G2	G1/4, G3/8, G1/2, G3/4, G1
Temperature of medium	–10 … 60 °C	–10 … 80 °C
Medium pressure of gaseous media	0.5 … 10 bar	
Medium pressure of liquid media	0.5 … 6 bar	
Flow rate Kv	1.6 … 39 m³/h	1.5 … 11.5 m³/h
Description	• Poppet valve with diaphragm seal • Brass or stainless steel casting design • Electrical connection via solenoid armature tube • Wide range of coils • Coil can be ordered separately	• For all applications with a differential pressure of min. 0.5 bar • For high pressures and high flow rates with relatively small solenoids • For controlling gaseous and liquid media in open circuits
➔ Page/online	**272**	**vzwp**

FESTO

Pneumatically and mechanically actuated process and media valves

	Pinch valves **VZQA**	**Angle seat valves** **VZXF**	**Ball valves** **VZBA**
Design	Pinch valve, pneumatically actuated	Poppet valve with spring return	2-way ball valve, 3-way ball valve, L-shaped hole, T-shaped hole
Valve function	2/2-way, monostable, closed, 2/2-way, monostable, open	2/2-way, monostable, closed	2/2, 3/2
Actuation type	Pneumatic	Pneumatic	Mechanical
Nominal width		12 … 45 mm	
Nominal width DN	15 mm, 25 mm, 6 mm	15 mm, 20 mm, 25 mm, 32 mm, 40 mm, 50 mm	10 mm, 100 mm, 15 mm, 20 mm, 25 mm, 32 mm, 40 mm, 50 mm, 65 mm, 8 mm, 80 mm
Process valve connection	Clamp to ASME-BPE, clamp to DIN 32676, G1, G1/2, G1/4, NPT1/2, NPT1/4	G1/2, G3/4, G1, G1 1/4, G1 1/2, G2, NPT1, NPT1 1/2, NPT1 1/4, NPT1/2, NPT2, NPT3/4	Rp1/4, Rp3/8, Rp1/2, Rp3/4, Rp1, Rp1 1/4, Rp1 1/2, Rp2, Rp2 1/2, Rp3, Rp4, weld-on ends/weld-on ends
Flow rate Kv	0.7 … 18 m^3/h	3.3 … 43 m^3/h	7 … 1414 m^3/h
Temperature of medium	–5 … 100 °C	–40 … 200 °C	–10 … 200 °C
Medium pressure	0 … 6 bar	–0.9 bar, 0 … 40 bar	
Description	• Modular design • Quick and easy replacement of the diaphragm • Selection of different materials for housing and connection caps • Different connection cap designs (G and NPT thread, clamp ferrule to DIN 32676 and ASME-BPE) • For critical, abrasive and viscous media • Up to 2 million switching cycles • FDA-compliant materials • Easy-to-clean design • Flow direction is freely selectable	• Sturdy design • Stainless steel and gunmetal (red brass) process valves with stainless steel, brass or aluminium actuators • For medium pressures up to 40 bar • Safety position “closing” • Different actuator sizes and housing materials • Selection of different seat and shaft seals • Flow direction is freely selectable • For liquids, gases and other easily contaminated media • Easy-to-clean design	• Automatable 2-way or 3-way ball valve • Stainless steel design • Blow-out proof shaft • Manual operation possible using hand lever • Connecting thread to DIN 2999 or DIN ISO 228-1 • Mounting flange to ISO 5211 • ATEX certification for zone 1, 21, 2, 22
➔ **Page/online**	**274**	**264**	**vzba**

7

FESTO

Pneumatically and mechanically actuated process and media valves

	Ball valve actuator units VZBA	Ball valve actuator units VZPR
Design	2-way ball valve, 3-way ball valve, L-shaped hole, quarter turn actuator, T-shaped hole	2-way ball valve, quarter turn actuator
Valve function	2/2, 3/2	
Actuation type	Pneumatic	Electrical, pneumatic
Nominal width		
Nominal width DN	10 mm, 100 mm, 15 mm, 20 mm, 25 mm, 32 mm, 40 mm, 50 mm, 65 mm, 8 mm, 80 mm	15 mm, 20 mm, 25 mm, 32 mm, 40 mm, 50 mm, 63 mm
Process valve connection	Rp1, Rp1 1/2, Rp1 1/4, Rp1/2, Rp1/4, Rp2, Rp2 1/2, Rp3, Rp3/4, Rp3/8, Rp4, weld-on ends/weld-on ends	Rp1/4, Rp3/8, Rp1/2, Rp3/4, Rp1, Rp1 1/4, Rp1 1/2, Rp2, Rp2 1/2
Flow rate Kv	7 … 1414 m³/h	5.9 … 535 m³/h
Temperature of medium	–10 … 200 °C	–20 … 150 °C
Medium pressure	6 … 8.4 bar	1 … 8.4 bar
Description	• Ball valve actuator unit with double-acting or single-acting quarter turn actuator • Stainless steel ball valve • Port pattern to NAMUR for solenoid valves/sensor boxes to VDI/VDE 3845 • Flow is fully opened or closed in both directions • ATEX certification for zone 1, 21, 2, 22	• Ball valve actuator unit with double-acting quarter turn actuator • Brass ball valve • Port pattern to NAMUR for solenoid valves/sensor boxes to VDI/VDE 3845 • Flow is fully opened or closed in both directions
➔ **Page/online**	vzba	vzpr

7

Customised components – for your specific requirements

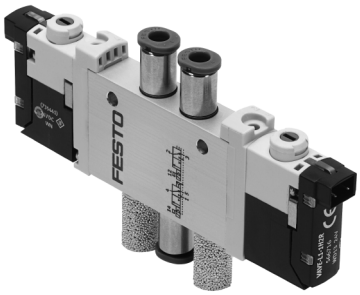

Valves with customised designs
Can't find the valve you need in our catalogue? We can offer you customised components that are tailored to your specific requirements.

Common product modifications:
- Coatings for special ambient conditions
- Customised cables: length, pin allocation, pre-assembled with plug
- Modified actuating elements
- Modified connecting thread
- Modified valve sub-bases

Many additional variants are possible. Ask your Festo sales engineer, who will be happy to help.
➔ **www.festo.com/contact**

Solenoid valves VSNC, NAMUR

FESTO

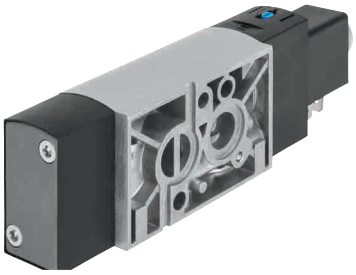

- Connections G¼, NPT ¼
- Flow rate 900 … 1350 l/min
- Voltage 12, 24, 48 V DC, 24, 48, 120, 230 V AC
- Port pattern to NAMUR to VDE/VDI 3845
- Solenoid actuated, piloted
- Mechanical spring return
- Can be converted from 5/2- to 3/2-way function
- Selected types in accordance with ATEX directive for potentially explosive atmospheres
  → **www.festo.com/en/ex**

Order code

001		002		003		004		005		006	007		008		009		010		011	012
VSNC	–	F	–		–	C	–	M52	–	M	D	–	G14	–		–		–		

Legend: Mandatory entry; Optional entry

001	Type
VSNC	Solenoid valve

002	Valve type
F	Flanged valve

003	Design principle
–	Piston spool

004	Additional function
–	None
C	Convertible valve function

005	Valve function
M52	5/2-way valve, single solenoid
B52	5/2-way valve, double solenoid
P53C	5/3-way valve, mid-position closed
P53E	5/3-way valve, mid-position exhausted
P53U	5/3-way valve, mid-position pressurised

006	Reset method for single solenoid valves
–	None (for double solenoid valves)
M	Mechanical spring

007	Manual override
D	Non-detenting, detenting

008	Pneumatic connection
G14	G¼
N14	¼ NPT

009	Exhaust
–	No fitting

010	Interface to valve controller
F8	With armature tube 8 mm long
FN	With armature tube 9 mm long

011	Nominal operating voltage
–	None
1	24 V DC

012	Electrical connection
–	None
B2	Connecting cable type B, industry standard

Product options

T Poppet valve
M32C 3/2-way valve, normally closed

H Manual override, non-detenting, resetting
S Manual override, covered

Exhaust
QN With fitting
U1 Silencer with metal housing
U3 Silencer with polymer housing

Pneumatic connection
Q6 Push-in connector 6 mm
Q8 Push-in connector 8 mm
Q10 Push-in connector 10 mm
T14 Push-in connector ¼
T38 Push-in connector ⅜
T516 Push-in connector 5/16

Nominal operating voltage
1 A 24 V AC/50 – 60 Hz
3 A 230 V AC/50 – 60 Hz
3 W 230 V AC/240 V AC/50 – 60 Hz
7 A 48 V AC/50 – 60 Hz
16B 120 V AC/60 Hz and 110 V AC/50 – 60 Hz
5 12 V DC

Ignition protection type
A Intrinsically safe
M Encapsulation
N Non-sparking

Electrical accessories valve
G Connector socket, without LED

Electrical connection
A1 Connecting cable type A, to EN 175301
C3 Cable, 3 m
K11 Cable with insulating conduit connection

Degree of protection for electrics
S8 IP67

EU certification
EX2 II 3GD
EX4 II 2GD

Certification
U4 Class 1 Div 1 to NEC 500

FESTO

Ordering – Product options

Configurable product

This product and all its product options can be ordered using the configurator.

The configurator can be found under Products at
➔ **www.festo.com/catalogue/...**

Enter the type or the configuration part number in the search field.

Ordering – Basic design

Without solenoid coil, convertible valve function		
Pneumatic connection	Type	Part no.
005 **5/2-way valve, single solenoid**		
010 With armature tube 8 mm long		
G¼	VSNC-FC-M52-MD-G14-F8	577257
¼ NPT	VSNC-FC-M52-MD-N14-F8	577262
010 With armature tube 9 mm long		
G¼	VSNC-FC-M52-MD-G14-FN	577267
¼ NPT	VSNC-FC-M52-MD-N14-FN	577272

With 24 V DC solenoid coil, without plug socket, convertible valve function		
Pneumatic connection	Type	Part no.
005 **5/2-way valve, single solenoid**		
010 With armature tube 8 mm long		
G¼	VSNC-FC-M52-MD-G14-F8-1B2	577295

Without solenoid coil, without additional function		
Pneumatic connection	Type	Part no.
005 **5/2-way valve, double solenoid**		
010 With armature tube 8 mm long		
G¼	VSNC-F-B52-D-G14-F8	577258
¼ NPT	VSNC-F-B52-D-N14-F8	577263
010 With armature tube 9 mm long		
G¼	VSNC-F-B52-D-G14-FN	577268
¼ NPT	VSNC-F-B52-D-N14-FN	577273
005 **5/3-way valve, mid-position closed**		
010 With armature tube 8 mm long		
G¼	VSNC-F-P53C-MD-G14-F8	577259
¼ NPT	VSNC-F-P53C-MD-N14-F8	577264
010 With armature tube 9 mm long		
G¼	VSNC-F-P53C-MD-G14-FN	577269
¼ NPT	VSNC-F-P53C-MD-N14-FN	577274
005 **5/3-way valve, mid-position exhausted**		
010 With armature tube 8 mm long		
G¼	VSNC-F-P53U-MD-G14-F8	577260
¼ NPT	VSNC-F-P53U-MD-N14-F8	577265
010 With armature tube 9 mm long		
G¼	VSNC-F-P53U-MD-N14-FN	577275
¼ NPT	VSNC-F-P53U-MD-G14-FN	577270
005 **5/3-way valve, mid-position pressurised**		
010 With armature tube 8 mm long		
G¼	VSNC-F-P53E-MD-G14-F8	577261
¼ NPT	VSNC-F-P53E-MD-N14-F8	577266
010 With armature tube 9 mm long		
G¼	VSNC-F-P53E-MD-G14-FN	577271
¼ NPT	VSNC-F-P53E-MD-N14-FN	577276

FESTO

Accessories

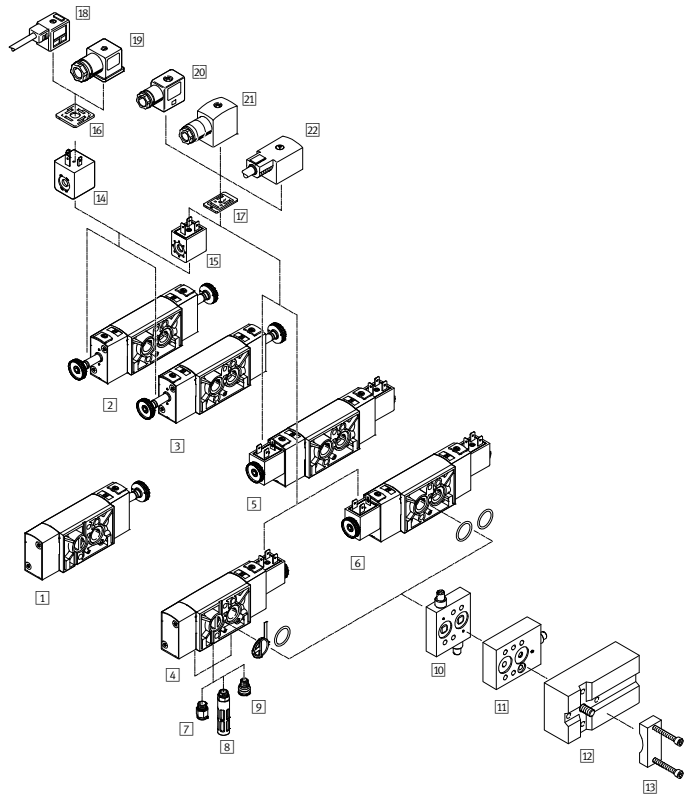

Solenoid valves VSNC-...-F8

1 3/2-way and 5/2-way valve, single solenoid ➔ 126
2 5/2-way valve, double solenoid ➔ vsnc
3 5/3-way valve, normally open, closed or exhausted ➔ vsnc
4 3/2-way and 5/2-way valve, single solenoid, with solenoid coil
5 5/2-way valve, double solenoid, with solenoid coil ➔ vsnc
6 5/3-way valve, normally open, closed or exhausted, with solenoid coil ➔ vsnc

7 Push-in fitting QS ➔ 212
8 Silencer U ➔ 241
9 Exhaust protection VABD-D3-SN-G14 ➔ vsnc
10 Flow control plate VABF-S7-F1B1P2-F ➔ vsnc
11 Flow control plate VABF-S7-F1B5P1-F ➔ vsnc
12 Connection kit VABF-S7-S-G14 ➔ vsnc
13 Mounting bracket VAME-S7-Y ➔ vsnc
14 Solenoid coil VACF-A ➔ 127
15 Solenoid coil VACF-B ➔ 127
16 Illuminating seal MC-LD ➔ vsnc
17 Illuminating seal MF-LD ➔ vsnc
18 Connecting cable KMC ➔ vsnc
19 Plug socket MSSD-C ➔ vsnc
20 Plug socket MSSD-F ➔ vsnc
21 Plug socket MSSD-F -S➔ vsnc
22 Connecting cable KMF➔ kmf

14/15 Solenoid coil VACF for solenoid valve VSNC-FC-M52-MD-G14-F8

Description		Type	Part no.
Connection pattern to industry standard, type B			
	12 V DC; 3,4 W	VACF-B-B2-5	8030801
	24 V DC; 3,3 W	VACF-B-B2-1	8030802
	48 V DC; 3,4 W	VACF-B-B2-7	8030803
	24 V AC; 50/60 Hz	VACF-B-B2-1A	8030804
	48 V AC; 50/60 Hz	VACF-B-B2-7A	8030805
	110/120 V AC; 50/60 Hz	VACF-B-B2-16B	8030806
	230/240 V AC; 50/60 Hz	VACF-B-B2-3W	8030808

Description		Type	Part no.
Connection pattern to DIN EN 175301-803, type A			
	12 V DC; 2,8 W	VACF-A-A1-5	8030821
	24 V DC; 2,6 W	VACF-A-A1-1	8030822
	48 V DC; 2,8 W	VACF-A-A1-7	8030823
	24 V AC; 50/60 Hz	VACF-A-A1-1A	8030824
	48 V AC; 50/60 Hz	VACF-A-A1-7A	8030825
	110/120 V AC; 50/60 Hz	VACF-A-A1-16B	8030826
	230/240 V AC; 50/60 Hz	VACF-A-A1-3W	8030828

Solenoid coil VACN-N

Description		Type	Part no.
Type of ignition protection: intrinsically safe Ex ia			
	28V	VACN-N-A1-1-EX4-A	8029139
Type of ignition protection: non-sparking Ex nA			
	24 V DC; 2,1 W	VACN-N-A1-1-EX2-N	8029136
	110 V AC; 50/60 Hz	VACN-N-A1-16B-EX2-N	8029137
	230 V AC; 50/60 Hz	VACN-N-A1-3A-EX2-N	8029138
Degree of protection IP65 with socket			
	24 V DC; 0,7 W	VACN-N-A1-1	8029144
	110 V AC; 50/60 Hz	VACN-N-A1-16B	8029134
	230 V AC; 50/60 Hz	VACN-N-A1-3A	8029135

Description		Type	Part no.
Type of ignition protection: encapsulated Ex me			
	230 V AC; 50/60 Hz	VACN-N-K1-3A-EX4-M	8029141
	110 V AC; 50/60 Hz	VACN-N-K1-16B-EX4-M	8029142
	24 V DC; 2,6 W	VACN-N-K1-1-EX4-M	8029143
Type of ignition protection: encapsulated AEx m, Class 1, Div 1 to NEC 500			
	230 V AC; 50 Hz	VACN-N-K11-3A-0.5-U4-M	8029140
	120 V AC; 60 Hz	VACN-N-K11-16B-0.5-U4-M	8029145
	24 V DC; 4,6 W	VACN-N-K11-1-0.5-U4-M	8029146

Solenoid valves VSVA, to ISO 5599-1

FESTO

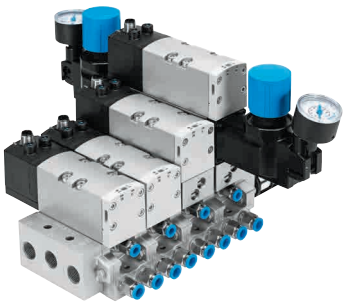

- Sturdy metal design
- Width 42 mm/ISO size 1
- Flow rate up to 1300 l/min
- Solenoid coil with central plug M12, 24 V DC
- Wide range of vertical stacking modules: pressure regulator, flow control, vertical pressure shut-off plate, etc.
- Also available as a valve manifold

Order code

001		002		003		004	005	006		007		008	009	010
VSVA	–	B	–		–				–	D1	–	1	R5	L

Legend: [ ] Mandatory entry [ ] Optional entry

001	Type
VSVA	Standards-based valves to ISO 5599-1

002	Valve type
B	Sub-base valve

003	Valve function
M52	5/2-way valve, single solenoid
B52	5/2-way valve, double solenoid

004	Reset method
–	Without, double solenoid valve
C	Pneumatic spring
M	Mechanical spring

005	Pilot air supply
–	Internal

006	Manual override
D	Non-detenting/detenting
H	Non-detenting

007	Pneumatic connection (width)
D1	Width 42 mm/ISO size 1

008	Nominal operating voltage
1	24 V DC

009	Electrical connection
R5	Central plug M12x1

010	Signal status display
L	LED (integrated)

Product options

D52 5/2-way valve, double solenoid with dominant signal at 14
P53C 5/3-way valve, mid-position closed
P53E 5/3-way valve, mid-position exhausted
P53U 5/3-way valve, mid-position pressurised

T32C 2x 3/2-way valve, normally closed
T32U 2x 3/2-way valve, normally open
T32H 2x 3/2-way valve, normally 1x open, 1x closed
T32F 2x 3/2-way valve, normally open, reverse operation

T32N 2x 3/2-way valve, normally open, reverse operation
T32W 2x 3/2-way valve, normally 1x open, 1x closed, reverse operation
T22C 2x 2/2-way valve, normally closed

Additional function
V 2x 2/2-way valve with vacuum operation
Z External pilot air supply
D2 Pneumatic connection: width 52 mm/ISO size 2

Ordering – Product options

Configurable product

This product and all its product options can be ordered using the configurator.

The configurator can be found under Products at
→ **www.festo.com/catalogue/...**

Enter the type or the configuration part number in the search field.

FESTO

Ordering – Basic design

003 Valve function	004 Reset method	007 Pneumatic connection (width)	Type	Part no.
5/2-way valve, single solenoid	Reset method: pneumatic spring	Width 42 mm/ISO size 1	VSVA-B-M52-AD-D1-1R5L	561362
5/2-way valve, single solenoid	Reset method: mechanical spring		VSVA-B-M52-MD-D1-1R5L	561363
5/2-way valve, double solenoid	Without, dominance: 1st signal		VSVA-B-B52-D-D1-1R5L	561364

Accessories

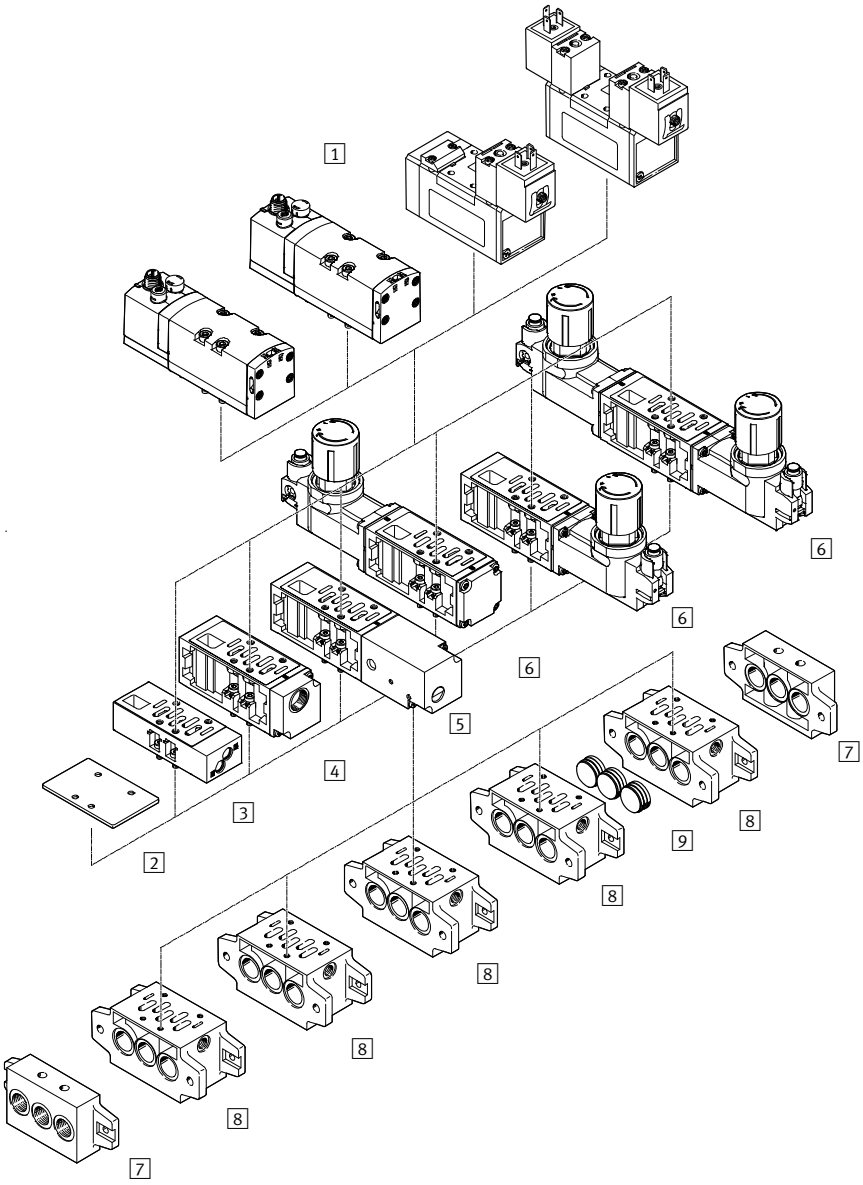

Manifold assembly
1 Solenoid valve VSVA with central plug M12, 3-pin
Individual sub-base NAS, NAU ➔ 129
2 Blanking plate NDV ➔ 129
3 Flow control plate VABF-S1-...-F1B1-C, GRO-ZP-... ➔ vsva
4 Vertical supply plate VABF-S1-...-P1A3-G38 ➔ vsva
5 Vertical pressure shut-off plate VABF-S1-...-L1D1-C ➔ vsva
6 Regulator plate VABF-S1-...-R..., LR-ZP-... ➔ vsva
7 End plate kit NEV ➔ 129
8 Manifold sub-base NAV ➔ 129
9 Isolating disc NSC ➔ 129

Manifold sub-base with 90° connections NAVW ➔ 129

1 Individual sub-base NAS, NAU

For	Type	Part no.
Lateral pneumatic connections		
42 mm	NAS-1/4 – 1 A-ISO	9484
Pneumatic connections underneath		
42 mm	NAU-1/4-1B-ISO	9485

2 Blanking plate NDV

For	Type	Part no.
42 mm	NDV-1-ISO	9489

7 End plate kit NEV

For	Type	Part no.
42 mm	NEV-1DA/DB-ISO	10174

8 Manifold sub-base NAV

For	Type	Part no.
Pneumatic connections underneath		
42 mm	NAV-1/4-1C-ISO	10173

9 Isolating disc NSC

For	Type	Part no.
42 mm	NSC-1/4-1-ISO	11550

Manifold sub-base with 90° connections NAVW

For	Type	Part no.
Connections at side and underneath		
42 mm	NAVW-1/4-1-ISO	152789

Solenoid valves VSVA, to ISO 15407-1

FESTO

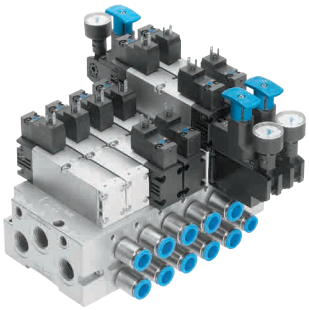

- High-performance valves in a sturdy metal housing
- Width of standards-based valve 18/26 mm, flow rates up to 1400 l/min
- Manifold assembly with mixture of sizes possible
- Electrical connection via round or square plug socket
- Complete and standardised valve range
- Wide range of vertical stacking modules: pressure regulator, flow control valve, vertical pressure shut-off plate, etc.

Order code

001		002		003		004	005	006		007		008	009	010
VSVA	–	B	–		–			H	–		–	1		

Legend: Mandatory entry; Optional entry

001	Type
VSVA	Standards-based valves, to ISO 15407-1

002	Valve type
B	Sub-base valve

003	Valve function
M52	5/2-way valve, single solenoid
B52	5/2-way valve, double solenoid
P53E	5/3-way valve, mid-position exhausted

004	Reset method
–	Without, double solenoid valve
C	Pneumatic spring
M	Mechanical spring

005	Pilot air supply
–	Internal

006	Manual override
H	With manual override

007	Pneumatic connection (width)
A1	ISO size 01, width 26 mm
A2	ISO size 02, width 18 mm

008	Nominal operating voltage
1	24 V DC

009	Electrical connection
C1	Type C to EN 175301-803
R5	Central plug M12x1

010	Signal status display
–	None
L	LED (integrated)

Product options

D52 5/2-way valve, double solenoid with dominant signal at 14
P53C 5/3-way valve, mid-position closed
P53U 5/3-way valve, mid-position pressurised
T32C 2x 3/2-way valve, normally closed
T32U 2x 3/2-way valve, normally open
T32H 2x 3/2-way valve, normally 1x open, 1x closed
T32F 2x 3/2-way valve, normally open, reverse operation
T32N 2x 3/2-way valve, normally open, reverse operation
T32W 2x 3/2-way valve, normally 1x open, 1x closed, reverse operation
T22C 2x 2/2-way valve, normally closed
Z External pilot air supply

Operating voltage
24 V AC, 110 V AC, 230 V AC, 12 V DC

Electrical connection
R2 Central plug M8x1
R3 Individual plug M12
P1 Without pilot valve

Position sensing
APC Proximity sensor PNP with open cable end
APP Proximity sensor PNP with plug M8
ANC Proximity sensor NPN with open cable end
ANP Proximity sensor NPN with plug M8

Ordering – Product options

Configurable product

This product and all its product options can be ordered using the configurator.

The configurator can be found under Products at
➔ **www.festo.com/catalogue/...**

Enter the type or the configuration part number in the search field.

FESTO

Ordering – Basic design

003 **Valve function**	007 **Pneumatic connection A1** Port pattern to ISO size 26 mm (01)		007 **Pneumatic connection A2** Port pattern to ISO size 18 mm (02)	
	Type	Part no.	Type	Part no.
003 Electrical connection R5: with central plug M12x1				
5/2-way solenoid valve, single solenoid	VSVA-B-M52-AH-A1-1R5L	534555	VSVA-B-M52-AH-A2-1R5L	546767
	VSVA-B-M52-MH-A1-1R5L	534556	VSVA-B-M52-MH-A2-1R5L	546768
5/2-way solenoid valve, double solenoid	VSVA-B-B52-H-A1-1R5L	534557	VSVA-B-B52-H-A2-1R5L	546769
5/3-way valve, mid-position exhausted	VSVA-B-P53E-H-A1-1R5L	534560		
003 Electrical connection C1: type C to EN 175301-803 (with pilot control with square plug type C to EN 175301-803)				
5/2-way solenoid valve, single solenoid	VSVA-B-M52-AH-A1-1C1	546700	VSVA-B-M52-AH-A2-1C1	546701
	VSVA-B-M52-MH-A1-1C1	546702	VSVA-B-M52-MH-A2-1C1	546703
5/2-way solenoid valve, double solenoid	VSVA-B-B52-H-A1-1C1	546696	VSVA-B-B52-H-A2-1C1	546697
5/3-way valve, mid-position exhausted	VSVA-B-P53E-H-A1-1C1	546706		

Accessories

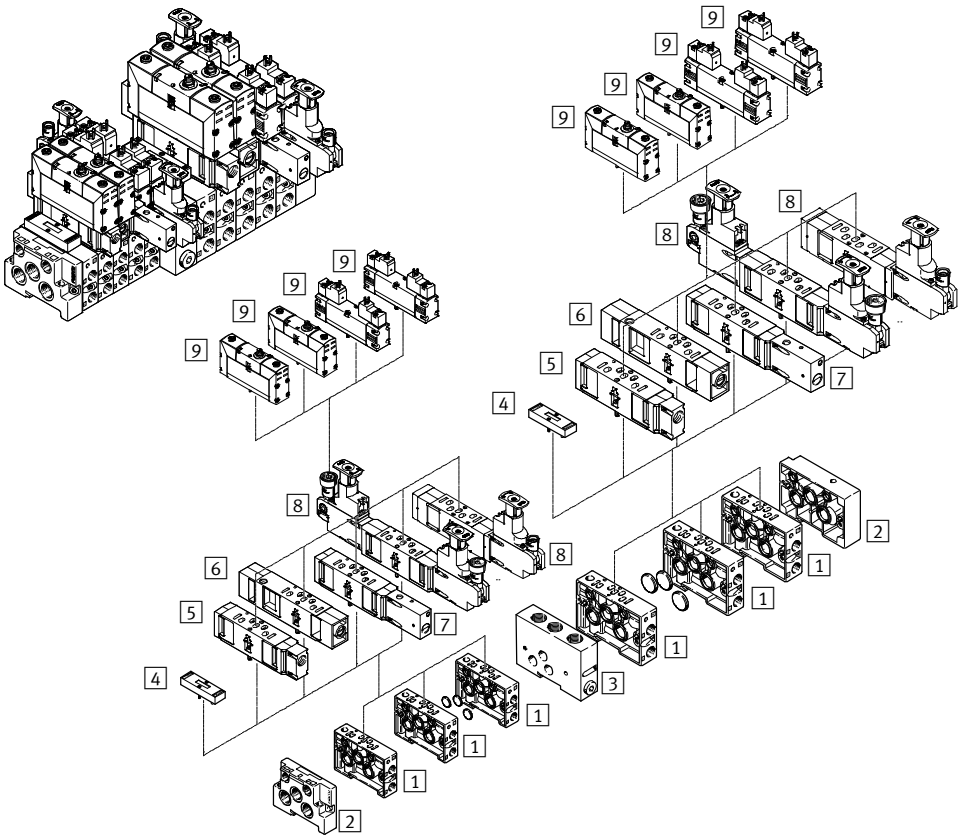

1 Manifold sub-base NAW with lateral ports 2 and 4 ➔ 131
2 End plate kit NEV for sealing the manifold sub-bases ➔ 131
3 Intermediate plate NZV for connecting width 18 mm with width 26 mm ➔ nzv
4 Blanking plate NDV for vacant or spare positions ➔ ndv
5 Vertical supply plate VABF...P1-A3 for intermediate air supply ➔ vabf
6 Flow control plate VABF...F1-B1 for flow control in ducts 3 and 5 ➔ vabf
7 Vertical pressure shut-off plate VABF...L1-D1 with switch for manual shut-off of duct 1 ➔ vabf
8 Pressure regulator plate VABF... R...-C2 ➔ vabf
9 Solenoid valve VSVA ➔ 130

Individual sub-base NAS ➔ 131

1 Manifold sub-base NAW with lateral ports 2 and 4

For	Type	Part no.
26 mm	NAW-1/4-01-VDMA	161102
18 mm	NAW-1/8-02-VDMA	161110

2 End plate kit NEV

For	Type	Part no.
26 mm	NEV-01-VDMA	161104
18 mm	NEV-02-VDMA	161112

4 Blanking plate NDV

For	Type	Part no.
26 mm	NDV-01-VDMA	161107
18 mm	NDV-02-VDMA	161114

Individual sub-base NAS

For	Type	Part no.
26 mm	NAS-1/4-01-VDMA	161109
18 mm	NAS-1/8-02-VDMA	161115

Solenoid valves VUVS

FESTO

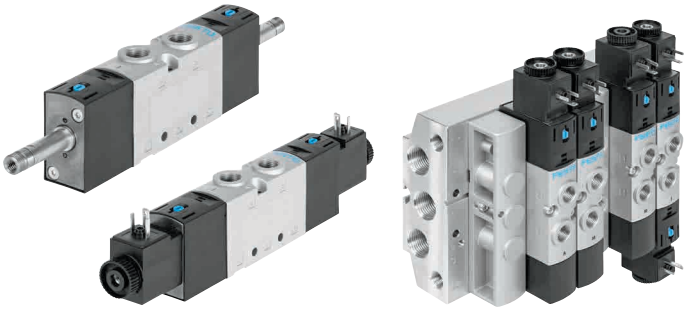

- Width of valves 20 (21 mm), 25 (26.5 mm), flow rate up to 1300 l/min
- In-line valves can be used as individual valves or manifold valves
- Variable pressure zones
- Universal valve, sturdy and durable
- Low-cost, no limitations with regard to performance
- Can be used as a valve manifold VTUS

Order code

001		002	003		004		005		006	007		008		009		010		011	012		013
VUVS	–	L		–		–		–				D	–		–		–	1		–	

Legend: Mandatory entry; Optional entry

001	Type
VUVS	Solenoid valve

002	Valve type
L	In-line valve

003	Design principle
–	Piston spool with sealing cartridge
K	Piston spool with sealing ring

004	Size
20	Valve width 21 mm
25	Valve width 26.5 mm
30	Valve width 31 mm

005	Valve functions
B52	5/2-way valve, double solenoid
M52	5/2-way valve, single solenoid
P53C	5/3-way valve, mid-position closed
M32C	3/2-way valve, normally closed

006	Reset method
–	Without, for valve function B52 and P53
C	Pneumatic spring, for valve function T32 and M52
M	Mechanical spring, for valve function T32, M52 and P53C

007	Pilot air supply
–	Internal

008	Manual override
D	Non-detenting, detenting without accessories

009	Pneumatic connection
G18	Thread G⅛
G14	Thread G¼
G38	Thread G⅜

010	Valve pilot control interface
–	Standard
F7	With 8 mm armature tube, short
F8	With 8 mm armature tube, standard

011	Nominal operating voltage
1	24 V DC

012	Electrical connection
C1	Connection pattern type C, to EN 175301
B2	Connection pattern type B, industry standard

013	Version
–	Extended features
S	Core features

Product options

Valve functions:
M32U 3/2-way valve, single solenoid, open
P53U 5/3-way valve, pressurised
P53E 5/3-way valve, exhausted

Pilot air supply:
Z External

Manual override:
S Covered
H Non-detenting

Pneumatic connection:
⅛NPT, ¼NPT, ⅜NPT
Push-in connector 4 … 12 mm, push-in connector 5/32" … ⅜"

Exhaust:
QN With fitting
U1 Silencer with metal housing
U3 Silencer with polymer housing

Nominal operating voltage:
24 V AC, 230 V AC, 230/240 V AC, 12 V DC, 110/120 V AC

Degree of protection for electrics:
S8 IP67

FESTO

Ordering – Product options

Configurable product

This product and all its product options can be ordered using the configurator.

The configurator can be found under Products at
➔ **www.festo.com/catalogue/...**

Enter the type or the configuration part number in the search field.

Configuration part no. 004 Size	Type	Part no.
002 **In-line valve,** 003 **Piston spool with sealing cartridge**		
20 (valve width 21 mm)	VUVS-L20	576516
25 (valve width 26.5 mm)	VUVS-L25	8022014
30 (valve width 31 mm)	VUVS-L30	8022017

Ordering – Basic design

013 **Core features** 004 Size	Type	Part no.	Type	Part no.	Type	Part no.
012 **Connection pattern type C, to EN 175 301,** 002 **In-line valve,** 003 **Piston spool with sealing ring,** 010 **With standard valve pilot control interface**						
	005 **3/2-way, normally closed**		005 **5/2-way, single solenoid**		005 **5/2-way, double solenoid**	
	006 **Pneumatic spring**		006 **Pneumatic spring**		006 **–**	
20 (valve width 21 mm)	VUVS-LK20-M32C-AD-G18-1C1-S	8043213	VUVS-LK20-M52-AD-G18-1C1-S	8043214	VUVS-LK20-B52-D-G18-1C1-S	8043215
012 **Connection pattern type B, industry standard,** 002 **In-line valve,** 003 **Piston spool with sealing ring,** 010 **With standard valve pilot control interface**						
	005 **3/2-way, normally closed**		005 **5/2-way, double solenoid**		005 **5/2-way, single solenoid**	
	006 **Pneumatic spring**		006 **–**		006 **Pneumatic spring**	
25 (valve width 26.5 mm)	VUVS-LK25-M32C-AD-G14-1B2-S	8043217	VUVS-LK25-B52-D-G14-1B2-S	8043219	VUVS-LK25-M52-AD-G14-1B2-S	8043218

004 Size	Type	Part no.	Type	Part no.	Type	Part no.
012 **Connection pattern type C, to EN 175 301,** 002 **In-line valve,** 003 **Piston spool with sealing cartridge,** 010 **With armature tube valve pilot control interface**						
	005 **3/2-way, normally closed**		005 **3/2-way, normally closed**		005 **5/2-way, single solenoid**	
	006 **Mechanical spring**		006 **Pneumatic spring**		006 **Mechanical spring**	
20 (valve width 21 mm)	VUVS-L20-M32C-MD-G18-F7-1C1	575274	VUVS-L20-M32C-AD-G18-F7-1C1	575269	VUVS-L20-M52-MD-G18-F7-1C1	575264
25 (valve width 26.5 mm)	VUVS-L25-M32C-MD-G14-F8-1C1	575477	VUVS-L25-M32C-AD-G14-F8-1C1	575475	VUVS-L25-M52-MD-G14-F8-1C1	575511
30 (valve width 31 mm)	VUVS-L30-M32C-MD-G38-F8-1C1	575570	VUVS-L30-M32C-AD-G38-F8-1C1	575568	VUVS-L30-M52-MD-G38-F8-1C1	575604
	005 **5/2-way, single solenoid**		005 **5/2-way, double solenoid**		005 **5/3-way, mid-position closed**	
	006 **Pneumatic spring**		006 **–**		006 **Mechanical spring**	
20 (valve width 21 mm)	VUVS-L20-M52-AD-G18-F7-1C1	575263	VUVS-L20-B52-D-G18-F7-1C1	575265	VUVS-L20-P53C-MD-G18-F7-1C1	575268
25 (valve width 26.5 mm)	VUVS-L25-M52-AD-G14-F8-1C1	575503	VUVS-L25-B52-D-G14-F8-1C1	575518	VUVS-L25-P53C-MD-G14-F8-1C1	575525
30 (valve width 31 mm)	VUVS-L30-M52-AD-G38-F8-1C1	575596	VUVS-L30-B52-D-G38-F8-1C1	575611	VUVS-L30-P53C-MD-G38-F8-1C1	575618

FESTO

Accessories

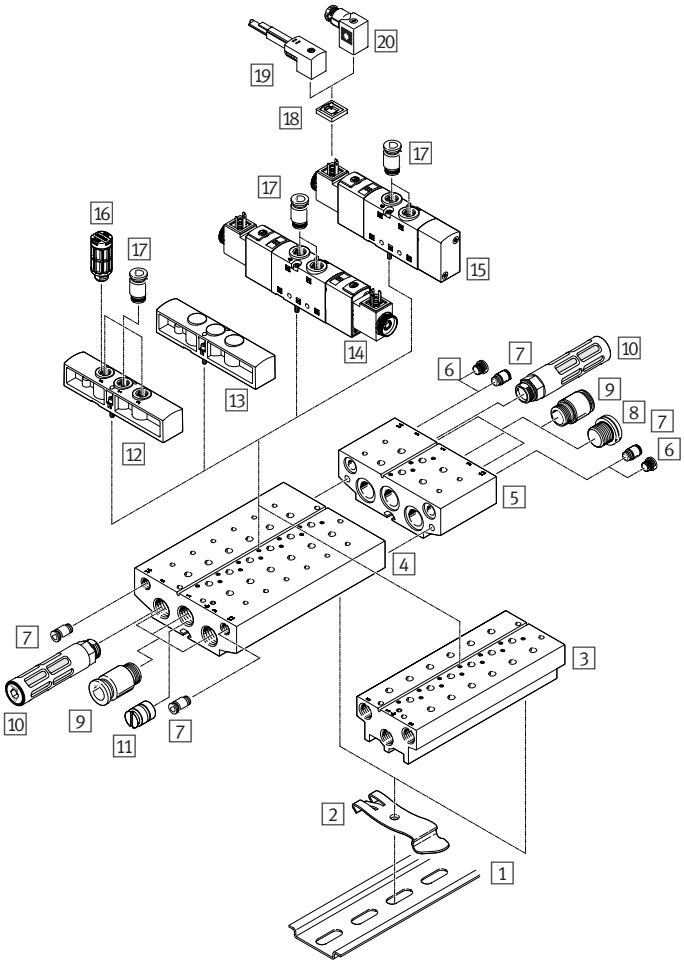

1 H-rail NRH-35-2000 ➔ nrh
2 H-rail mounting VAME-T-M4 ➔ vame
3 Manifold block, compact VABM-B10-20S ➔ 135
4 Manifold block, standard VABM-B10-20E ➔ vabm-b10
5 Extension module for standard manifold block VABM-B10-20EEE ➔ vabm-b10-eee
6 Blanking plug B with connecting thread ➔ b-1/8
7 Push-in fitting QS ➔ 212
8 Blanking plug B with connecting thread ➔ b-1/8
9 Push-in fitting QS ➔ 212
10 Silencer U ➔ 241
11 Separator VABD ➔ vabd
12 Supply plate VABF-B10-20-P1A4 ➔ vabf
13 Blanking plate VABB-B10-20 ➔ 134
14 Solenoid valve VUVS, 5/3-way valve and 5/2-way valve, double solenoid, with solenoid coil
15 Solenoid valve VUVS, 5/2-way valve, single solenoid, with solenoid coil
16 Silencer U ➔ 241
17 Push-in fitting QS ➔ 212
18 Illuminating seal MEB-LD ➔ meb
19 Plug socket with cable KMEB ➔ 135
Plug socket with cable KMF ➔ 135
20 Plug socket MSSD ➔ 135

Solenoid coil VACS-C, VACF-B ➔ 135

13 Blanking plate VABB-B10

Description	Type	Part no.
For valve position on manifold block for 3/2-way valves		
Size 20	VABB-B10-20-E-P3	576411
Size 25	VABB-B10-25-E-P3	8026210
Size 30	VABB-B10-30-E-P3	8026336
For valve position on manifold block for 5/2-way, 5/3-way valves		
Size 20	VABB-B10-20-E	576410
Size 25	VABB-B10-25-E	8026209
Size 30	VABB-B10-30-E	8026335
For valve position on supply manifold		
Size 20	VABB-B10-20-A	576409
Size 25	VABB-B10-25-A	8026208
Size 30	VABB-B10-30-A	8026334

FESTO

Accessories

3 Manifold block, compact VABM-B10-20S/ VABM-B10-25S

Width	Pneumatic connection	Valve positions	Type	Part no.
For 3/2-way valves, incl. seals and screws for mounting valves				
20 (21 mm)	G¼	2	VABM-B10-20S-G14-2-P3	576465
		4	VABM-B10-20S-G14-4-P3	576467
		6	VABM-B10-20S-G14-6-P3	576469
		8	VABM-B10-20S-G14-8-P3	576471
		10	VABM-B10-20S-G14-10-P3	576473
25 (26.5 mm)	G⅜	2	VABM-B10-25S-G38-2-P3	8026297
		4	VABM-B10-25S-G38-4-P3	8026299
		6	VABM-B10-25S-G38-6-P3	8026301
		8	VABM-B10-25S-G38-8-P3	8026303
		10	VABM-B10-25S-G38-10-P3	8026305
30 (31 mm)	G½	2	VABM-B10-30S-G12-2-P3	8026413
		4	VABM-B10-30S-G12-4-P3	8026415
		6	VABM-B10-30S-G12-6-P3	8026417
		8	VABM-B10-30S-G12-8-P3	8026419
		10	VABM-B10-30S-G12-10-P3	8026421
For 5/2-way and 5/3-way valves, incl. seals and screws for valve assembly				
20 (21 mm)	G¼	2	VABM-B10-20S-G14-2	576417
		4	VABM-B10-20S-G14-4	576419
		6	VABM-B10-20S-G14-6	576421
		8	VABM-B10-20S-G14-8	576423
		10	VABM-B10-20S-G14-10	576425
25 (26.5 mm)	G⅜	2	VABM-B10-25S-G38-2	8026261
		4	VABM-B10-25S-G38-4	8026263
		6	VABM-B10-25S-G38-6	8026265
		8	VABM-B10-25S-G38-8	8026267
		10	VABM-B10-25S-G38-10	8026269
30 (31 mm)	G½	2	VABM-B10-30S-G12-2	8026377
		4	VABM-B10-30S-G12-4	8026379
		6	VABM-B10-30S-G12-6	8026381
		8	VABM-B10-30S-G12-8	8026383
		10	VABM-B10-30S-G12-10	8026385
Common supply manifold for mounting on both sides, incl. seals and screws for valve assembly				
20 (21 mm)	G⅜	2	VABM-B10-20-G38-2-P53	576363
		4	VABM-B10-20-G38-4-P53	576365
		6	VABM-B10-20-G38-6-P53	576367
		8	VABM-B10-20-G38-8-P53	576369
		10	VABM-B10-20-G38-10-P53	576371
25 (26.5 mm)	G½	2	VABM-B10-25-G12-2-P53	8026219
		4	VABM-B10-25-G12-4-P53	8026221
		6	VABM-B10-25-G12-6-P53	8026223
		8	VABM-B10-25-G12-8-P53	8026225
		10	VABM-B10-25-G12-10-P53	8026227
30 (31 mm)	G¾	2	VABM-B10-30-G34-2-P53	8026338
		4	VABM-B10-30-G34-4-P53	8026340
		6	VABM-B10-30-G34-6-P53	8026342
		8	VABM-B10-30-G34-8-P53	8026344
		10	VABM-B10-30-G34-10-P53	8026346

19 Plug socket with cable KMEB

Description	Cable length	Type	Part no.
Angled socket, 3-pin, 24 V DC, type C, to EN 175301-803			
With LEDs	2.5 m	KMEB-1-24-2,5-LED	151688
	5 m	KMEB-1-24-5-LED	151689

19 Plug socket with cable KMF

Description	Cable length	Type	Part no.
Angled socket, 3-pin, 24 V DC, type B, industry standard			
With LED	2.5 m	KMF-1-24DC-2,5-LED	30935
	5 m	KMF-1-24DC-5-LED	30937

20 Socket MSSD

Description	Type	Part no.
Angled socket, 3-pin, 0 … 250 V AC/DC, square plug, type C, to EN 175301-803		
Cable connector Pg7	MSSD-EB	151687
Angled socket, 3-pin, 0 … 250 V AC/DC, square design MSF, type B, industry standard		
Cable connector Pg9	MSSD-F	34431

Solenoid coil VACS-C

Description	Type	Part no.
Connection pattern type C, to EN 175 301		
12 V DC	VACS-C-C1-5	8025331
DC 24 V	VACS-C-C1-1	8025330
48 V DC	VACS-C-C1-7	8025336
24 V AC, 50/60 Hz	VACS-C-C1-1 A	8025335
48 V AC, 50/60 Hz	VACS-C-C1-7 A	8025337
110/120 V AC, 50/60 Hz	VACS-C-C1-16B	8025334
230/240 V AC, 50/60 Hz	VACS-C-C1-3 W	8025338

Solenoid coil VACF-B

Description	Type	Part no.
Connection pattern type B, industry standard		
12 V DC	VACF-B-B2-5	8030801
DC 24 V	VACF-B-B2-1	8030802
48 V DC	VACF-B-B2-7	8030803
24 V AC, 50/60 Hz	VACF-B-B2-1 A	8030804
48 V AC, 50/60 Hz	VACF-B-B2-7 A	8030805
110/120 V AC, 50/60 Hz	VACF-B-B2-16B	8030806
230/240 V AC, 50/60 Hz	VACF-B-B2-3 W	8030808
Connection pattern type C, to EN 175 301		
12 V DC	VACF-B-C1-5	8030810
DC 24 V	VACF-B-C1-1	8030811
48 V DC	VACF-B-C1-7	8030812
24 V AC, 50/60 Hz	VACF-B-C1-1 A	8030813
48 V AC, 50/60 Hz	VACF-B-C1-7 A	8030814
110/120 V AC, 50/60 Hz	VACF-B-C1-16B	8030815
230/240 V AC, 50/60 Hz	VACF-B-C1-3 W	8030817
Connection pattern type A, to EN 175301-803		
DC 24 V	VACF-A-A1-1	8030822

FESTO

Designed for safe and easy handling

The VUVG has been a huge success since it was introduced. This is due in no small part to its first-class pneumatic performance as well as numerous other technical refinements.

Integrated LED for 360 degree view – convenient for a fast status overview as well as reduced downtimes.

Standard: manual override for easy commissioning.

Click! Just snap it in and it's done. E-box with patented contact system. Electrical connection box with patented contact system.

Retained mounting screws: robust, secure mounting, no lost parts.

Imperial connections (inch sizes) can be implemented in a trouble-free fashion with hybrid fittings.

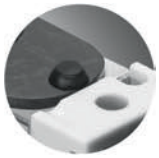

Direction indicator: detent for correct valve installation.

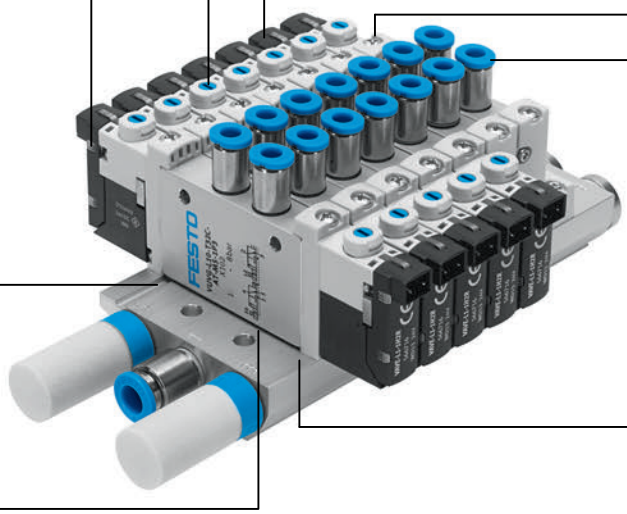

Several pressure zones possible – quickly and easy with separators.

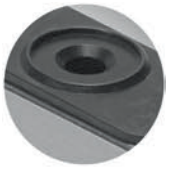

Positive-locking seal integrated into the valve.

Make the most of the available installation space with a host of connection options and functions.

Highly flexible: individual valves can be assembled in series without an additional manifold strip thanks to axial mounting bores.

No additional components required to mount an individual valve onto a valve manifold.

FESTO

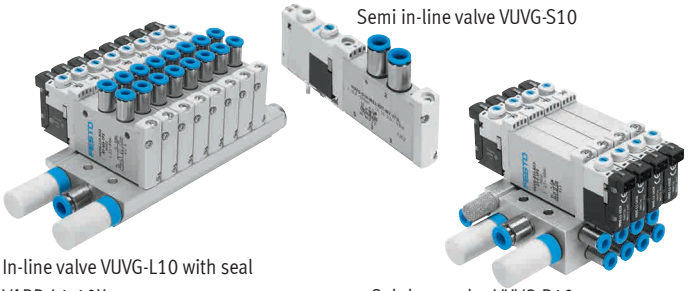

In-line valve VUVG-L10 with seal VABD-L1-10X

Semi in-line valve VUVG-S10

Sub-base valve VUVG-B10

- Connection technology via electrical connection box (E-box)
- Specific I-Port interface from Festo for fieldbus node
- IO-Link® mode for direct connection to a higher-level IO-Link® master
- Festo-specific I-Port interface with interlock
- Variable multi-pin plug connection using Sub-D or flat cable
- Sturdy and durable metal components
- Reversible piston spool valves, up to 24 valve positions

Order code

001		002	003	004		005		006	007	008		009		010	011	012		013
VUVG	–				–		–				–		–	1			–	

Legend: Mandatory entry; Optional entry

001	Type
VUVG	Directional control valve for standard applications

002	Valve type
B	Sub-base valve
S	Semi in-line valve
L	In-line valve/individual valve

003	Design principle
–	Piston spool with sealing cartridge
K	Piston spool with sealing ring

004	Size
10	Size 10
14	Size 14
10 A	Size 10, deviating flow rate
18	Size 18

005	Valve function
B52	5/2-way valve, double solenoid
M52	5/2-way valve, single solenoid
P53C	5/3-way valve, mid-position closed
P53E	5/3-way valve, mid-position exhausted
P53U	5/3-way valve, mid-position pressurised
T32C	2x 3/2-way valve, normally closed
T32H	2x 3/2-way valve, 1x normally closed, 1x open
T32U	2x 3/2-way valve, normally open
M32C	3/2-way valve, normally closed
M32U	3/2-way valve, normally open

006	Reset method
–	Without, for valve function B52 and P53
C	Pneumatic spring, for valve function T32 and M52
M	Mechanical spring, for valve function T32 and M52
R	Pneumatic/mechanical spring, for valve function M52

007	Pilot air supply
–	Internal

008	Manual override
H	Non-detenting
S	Covered
T	Non-detenting, detenting

009	Pneumatic connection
M5	Thread M5
M7	Thread M7
G18	Thread G⅛
G14	Thread G¼
F	Flange/sub-base

010	Nominal operating voltage
1	24 V DC

011	Electrical connection
R8	Individual plug M8, 3-pin
H2	Connection pattern H, horizontal plug

012	Signal status display
–	None
L	LED (integrated)

013	Version
–	Extended features
S	Core features

Product options

Operating voltage:
5 V DC, 12 VC

Pneumatic connection

Q6	Push-in connector 6 mm/G¼
Q8	Push-in connector 8 mm/G¼
Q10	Push-in connector 10 mm/G¼
T14	Push-in connector ¼"
T38	Push-in connector ⅜"
T516	Push-in connector 5/16"

Exhaust

U	Silencer
QN	With fittings

Electrical connection:

H3	Connection pattern H, vertical plug
S2	Connection pattern S, horizontal plug
S3	Connection pattern S, vertical plug
L...	With flying leads
K...	With cable
R1	Individual plug M8, 4-pin
P3	Without electrical connection box
T1	Plug-in
Z	External pilot air supply

FESTO

Ordering – Product options

Configurable product

This product and all its product options can be ordered using the configurator.

The configurator can be found under Products at
➔ **www.festo.com/catalogue/...**

Enter the type or the configuration part number in the search field.

Configuration part no. 011 Electrical connection	Type	Part no.
Individual connection	VUVG	564212
Plug-in	VUVG-...T1	575203

Ordering – Basic design

013 **Core features** 004 Size [mm]	Type	Part no.	Type	Part no.	Type	Part no.
011 **Electrical connection box R8 with individual plug M8,** 002 **In-line valve/individual valve,** 003 **Piston spool with sealing ring**						
	005 **2x3/2-way, normally closed**		005 **5/2-way, single solenoid**		005 **5/2-way, double solenoid**	
	006 **Pneumatic spring**		006 **Pneumatic spring**		006 –	
Size 10	VUVG-LK10-T32C-AT-M5-1R8L-S	8042542	VUVG-LK10-M52-AT-M5-1R8L-S	8042543	VUVG-LK10-B52-T-M5-1R8L-S	8042544
	VUVG-LK10-T32C-AT-M7-1R8L-S	8042550	VUVG-LK10-M52-AT-M7-1R8L-S	8042551	VUVG-LK10-B52-T-M7-1R8L-S	8042552
Size 14	VUVG-LK14-T32C-AT-G18-1R8L-S	8042566	VUVG-LK14-M52-AT-G18-1R8L-S	8042567	VUVG-LK14-B52-T-G18-1R8L-S	8042568
011 **Electrical connection box H2 with horizontal plug,** 002 **In-line valve/individual valve,** 003 **Piston spool with sealing ring**						
	005 **2x3/2-way, normally closed**		005 **5/2-way, single solenoid**		005 **5/2-way, double solenoid**	
	006 **Pneumatic spring**		006 **Pneumatic spring**		006 –	
Size 10	VUVG-LK10-T32C-AT-M5-1H2L-S	8042538	VUVG-LK10-M52-AT-M5-1H2L-S	8042539	VUVG-LK10-B52-T-M5-1H2L-S	8042540
	VUVG-LK10-T32C-AT-M7-1H2L-S	8042546	VUVG-LK10-M52-AT-M7-1H2L-S	8042547	VUVG-LK10-B52-T-M7-1H2L-S	8042548
Size 14	VUVG-LK14-T32C-AT-G18-1H2L-S	8042562	VUVG-LK14-M52-AT-G18-1H2L-S	8042563	VUVG-LK14-B52-T-G18-1H2L-S	8042564
011 **Electrical connection box R8 with M8 individual plug,** 002 **Sub-base valve,** 003 **Piston spool with sealing ring**						
	005 **2x3/2-way, normally closed**		005 **5/2-way, single solenoid**		005 **5/2-way, double solenoid**	
	006 **Pneumatic spring**		006 **Pneumatic spring**		006 –	
Size 10	VUVG-BK10-T32C-AT-F-1R8L-S	8042558	VUVG-BK10-M52-AT-F-1R8L-S	8042559	VUVG-BK10-B52-T-F-1R8L-S	8042560
Size 14	VUVG-BK14-T32C-AT-F-1R8L-S	8042574	VUVG-BK14-M52-AT-F-1R8L-S	8042575	VUVG-BK14-B52-T-F-1R8L-S	8042576
011 **Electrical connection box H2 with horizontal plug,** 002 **Sub-base valve,** 003 **Piston spool with sealing ring**						
	005 **2x3/2-way, normally closed**		005 **5/2-way, single solenoid**		005 **5/2-way, double solenoid**	
	006 **Pneumatic spring**		006 **Pneumatic spring**		006 –	
Size 10	VUVG-BK10-T32C-AT-F-1H2L-S	8042554	VUVG-BK10-M52-AT-F-1H2L-S	8042555	VUVG-BK10-B52-T-F-1H2L-S	8042556
Size 14	VUVG-BK14-T32C-AT-F-1H2L-S	8042570	VUVG-BK14-M52-AT-F-1H2L-S	8042571	VUVG-BK14-B52-T-F-1H2L-S	8042572

004 Size	Type	Part no.	Type	Part no.	Type	Part no.
011 **Electrical connection box R8 with individual plug M8,** 002 **In-line valve/individual valve,** 003 **Piston spool with sealing cartridge**						
	005 **2x3/2-way, normally closed**		005 **5/2-way, single solenoid**		005 **5/2-way, double solenoid**	
	006 **Pneumatic spring**		006 **Pneumatic/mechanical spring**		006 –	
Size 10	VUVG-L10-T32C-AT-M5-1R8L	577347	VUVG-L10-M52-RT-M5-1R8L	572634	VUVG-L10-B52-T-M5-1R8L	576664
	VUVG-L10-T32C-AT-M7-1R8L	574218	VUVG-L10-M52-RT-M7-1R8L	574221	VUVG-L10-B52-T-M7-1R8L	574222
Size 14	VUVG-L14-T32C-AT-G18-1R8L	574226	VUVG-L14-M52-AT-G18-1R8L[1]	574229	VUVG-L14-B52-T-G18-1R8L	574230
Size 18	VUVG-L18-T32C-AT-G14-1R8L	8031525	VUVG-L18-M52-RT-G14-1R8L	8031531		
			VUVG-L18-M52-MT-G14-1R8L[2]	8031532		
	005 **5/3-way, mid-position closed**					
	006 –					
Size 10	VUVG-L10-P53C-T-M5-1R8L	577346				
	VUVG-L10-P53C-T-M7-1R8L	574223				
Size 14	VUVG-L14-P53C-T-G18-1R8L	574231				
Size 18	VUVG-L18-P53C-T-G14-1R8L	8031534				

1) 006 Pneumatic spring
2) 006 Mechanical spring

FESTO

Accessories

In-line valve VUVG-L with seal
VABD-L1-10X 1

Sub-base valve VUVG-B

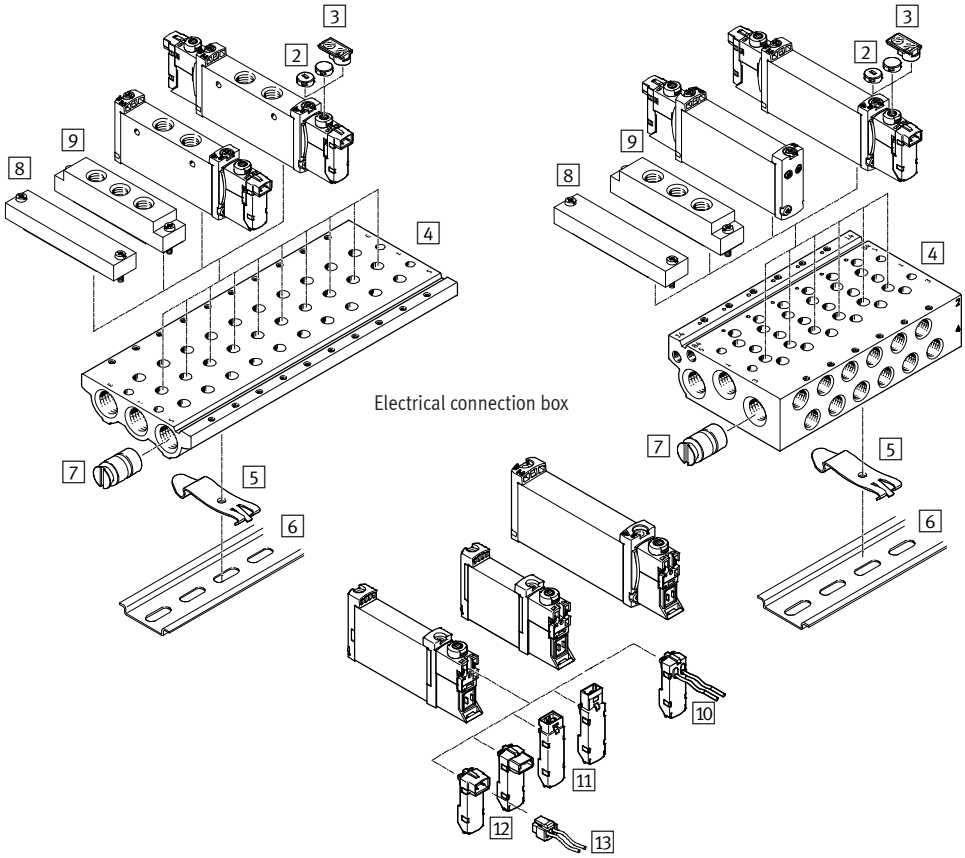

1 Seal VABD-L1-10X for in-line valve ➔ 139
2 Cover VMPA-HBT-B for manual over-ride, non-detenting ➔ 139
3 Inscription label holder ASLR-D for labelling the valves, cover for mounting screw and manual over-ride ➔ 139
4 Manifold rail VABM for 2 to 10 valve positions ➔ 140
5 H-rail mounting VAME-T-M4 for fitting the valve manifold on an H-rail ➔ 139
6 H-rail NRH-35-2000 for mounting ➔ nrh-35
7 Separator VABD-B for creating pressure zones ➔ 140
8 Blanking plate VABB for covering an unused valve position ➔ 140
9 Supply plate VABF ➔ 140
Electrical connection box VAVE ➔ 140
10 With flying leads ➔ 140
11 With vertical plug ➔ 140
12 With horizontal plug ➔ 140
13 Plug socket with cable NEBV, open end ➔ 140

1 Seal VABD-L1-10X

Size	Pneum. connection	Type	Part no.
For VUVG-L			
002 In-line valve/individual valve, 003 Piston spool with sealing cartridge			
10	M5	VABD-L1-10X-S-M5	566672
10	M7	VABD-L1-10X-S-M7	566673
14	G⅛	VABD-L1-14X-S-G18	566675
18	G¼	VABD-L1-18X-S-G14	574479
18	G¼	VABD-L1-18B-S-G14	574480
For VUVG-LK			
002 In-line valve/individual valve, 003 Piston spool with sealing ring			
10	M5	VABD-L1-10XK-S-M5	8043718
10	M7	VABD-L1-10XK-S-M7	8043719
14	G⅛	VABD-L1-14XK-S-G18	8043720

2/3/5 Cover VMPA/inscription label holder ASLR/H-rail mounting VAME

Size	Type	Part no.
10, 14, 18	VMPA-HBT-B (10 pieces)	540897
10, 14, 18	ASLR-D-L1 (10 pieces)	570818
10, 14 18	VAME-T-M4 (2 pieces)	569998

FESTO

Accessories

4 Manifold rail VABM

Size	Connection [1]	Valve positions	Type	Part no.
For individual valve VUVG-L with seal VABD-L1-10X 1				
10	M5/M7	2	VABM-L1-10S-G18-2	566558
		3	VABM-L1-10S-G18-3	566559
		4	VABM-L1-10S-G18-4	566560
		6	VABM-L1-10S-G18-6	566562
		8	VABM-L1-10S-G18-8	566564
		10	VABM-L1-10S-G18-10	566566
14	G¼	2	VABM-L1-14S-G14-2	566618
		3	VABM-L1-14S-G14-3	566619
		4	VABM-L1-14S-G14-4	566620
		6	VABM-L1-14S-G14-6	566622
		8	VABM-L1-14S-G14-8	566624
		10	VABM-L1-14S-G14-10	566626
18	G⅜	2	VABM-L1-18S-G38-2	574455
		3	VABM-L1-18S-G38-3	574456
		4	VABM-L1-18S-G38-4	574457
		6	VABM-L1-18S-G38-6	574459
		8	VABM-L1-18S-G38-8	574461
		10	VABM-L1-18S-G38-10	574463
For sub-base valve VUVG-B				
10	M5	2	VABM-L1-10 W-G18-2	566582
		3	VABM-L1-10 W-G18-3	566583
		4	VABM-L1-10 W-G18-4	566584
		6	VABM-L1-10 W-G18-6	566586
		8	VABM-L1-10 W-G18-8	566588
		10	VABM-L1-10 W-G18-10	566590
	M7	2	VABM-L1-10HW-G18-2	566606
		3	VABM-L1-10HW-G18-3	566607
		4	VABM-L1-10HW-G18-4	566608
		6	VABM-L1-10HW-G18-6	566610
		8	VABM-L1-10HW-G18-8	566612
		10	VABM-L1-10HW-G18-10	566614
14	G⅛	2	VABM-L1-14 W-G18-2	566642
		3	VABM-L1-14 W-G18-3	566643
		4	VABM-L1-14 W-G18-4	566644
		6	VABM-L1-14 W-G18-6	566646
		8	VABM-L1-14 W-G18-8	566648
		10	VABM-L1-14 W-G18-10	566650
18	G⅜	2	VABM-L1-18 W-G38-2	574467
		3	VABM-L1-18 W-G38-3	574468
		4	VABM-L1-18 W-G38-4	574469
		6	VABM-L1-18 W-G38-6	574471
		8	VABM-L1-18 W-G38-8	574473
		10	VABM-L1-18 W-G38-10	574475

1) VABM-L1-...S: Supply ports 1, 3, 5 VABM-L1-...W, VABM-L1-...HW: working ports 2, 4

7 Separator VABD-B

Size	Type	Part no.
For individual valve VUVG-L		
10	VABD-8-B	569995
14	VABD-10-B	569996
For sub-base valve VUVG-B		
10	VABD-6-B	569994
14	VABD-10-B	569996

8 Blanking plate VABB

Size	Type	Part no.
For individual valve VUVG-L		
10	VABB-L1-10-S	566462
14	VABB-L1-14	569989
18	VABB-L1-18	574482
For sub-base valve VUVG-B		
10	VABB-L1-10-W	566495
14	VABB-L1-14	569989

9 Supply plate VABF

Size	connection	Type	Part no.
For individual valve VUVG-L			
10	M5	VABF-L1-10-P3A4-M5	569991
10	M7	VABF-L1-10-P3A4-M7	569992
14	G⅛	VABF-L1-14-P3A4-G18	569993
For sub-base valve VUVG-B			
10	M5	VABF-L1-10-P3A4-M5	569991
14	G⅛	VABF-L1-14-P3A4-G18	569993
18	G¼	VABF-L1-18-P3A4-G14	574481

10/11/12 Electrical connection box VAVE

Description	Type	Part no.
10 With flying leads, LED, protective circuit		
0.5 m, 24 and 12 V DC	VAVE-L1-1VL1-LP[1]	566722
1 m	VAVE-L1-1VL2-LP[1]	566723
2.5 m	VAVE-L1-1VL3-LP[1]	566724
1 m	VAVE-L1-1VK7-LP[3]	573942
11 Vertical plug, LED, protective circuit		
24 and 12 V DC	VAVE-L1-1VH3-LP[1]	566715
12 Horizontal plug, LED, protective circuit		
24 and 12 V DC	VAVE-L1-1VH2-LP[1]	566714
DC 24 V	VAVE-L1-1H2-LR[2]	566716
24 and 12 V DC	VAVE-L1-1VR8-LP[3]	573919

1) Additional functions: spark arresting, bipolar, IP40
2) Additional functions: spark arresting, reduction of holding current, IP40
3) Additional functions: spark arresting, bipolar, IP65

13 Plug socket with cable NEBV

Description	Cable length	Type	Part no.
Straight socket, 2-pin			
Flying leads, open end	0.5 m	NEBV-H1G2-KN-0.5-LE	566654
	1 m	NEBV-H1G2-KN-1-LE2	566655
	2.5 m	NEBV-H1G2-KN-2.5-LE	566656
Individual cable, 0.5 m, open end, 2-pin	0.5 m	NEBV-H1G2-P-0.5-LE2	566658
	1 m	NEBV-H1G2-P-1-LE2	566659
	2.5 m	NEBV-H1G2-P-2.5-LE2	566660

Hand lever valves VHER

FESTO

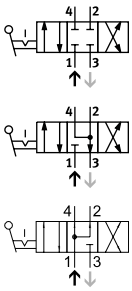

- Lever position sensing
- Connection M5, G⅛, G¼, G½, also available with NPT thread
- Flow rate 170 ... 3800 l/min

Order code

001	002	003	004	005	006	007
VHER		H				

Legend: Mandatory entry; Optional entry

001	Type
VHER	Hand lever valve with detent

002	Design
–	Hand lever, metal version
P	Hand lever, polymer version

003	Type of control
H	Hand lever, top

004	Valve function
B43C	4/3-way valve, detenting, mid-position closed
B43E	4/3-way valve, detenting, mid-position open
B43U	4/3-way valve, detenting, mid-position pressurised

005	Flow direction
–	Non-reversible

006	Connection direction, pneumatic connection
–	On the side
B	Underneath

007	Connection size, pneumatic connection
M5	M5
G18	G⅛
G14	G¼
G12	G½
N18	⅛ NPT
N14	¼ NPT
N12	½ NPT

Ordering – Basic design, metric thread

	Connection	Standard nominal flow rate	Type	Part no.
Metal lever				
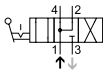	G⅛	800 l/min	VHER-H-B43U-B-G18	3488215
	G¼	1500 l/min	VHER-H-B43U-B-G14	3515286
	G½	3800 l/min	VHER-H-B43U-B-G12	3192072
	G⅛	600 l/min	VHER-H-B43U-G18	3488214
	G¼	1150 l/min	VHER-H-B43U-G14	3515108
	G½	3200 l/min	VHER-H-B43U-G12	3192071
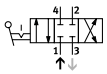	G⅛	800 l/min	VHER-H-B43C-B-G18	3488205
	G¼	1500 l/min	VHER-H-B43C-B-G14	3515202
	G½	3800 l/min	VHER-H-B43C-B-G12	3192066
	G⅛	600 l/min	VHER-H-B43C-G18	3488204
	G¼	1150 l/min	VHER-H-B43C-G14	3514710
	G½	3200 l/min	VHER-H-B43C-G12	3192065
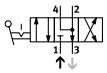	G⅛	800 l/min	VHER-H-B43E-B-G18	3488207
	G¼	1500 l/min	VHER-H-B43E-B-G14	3515258
	G½	3800 l/min	VHER-H-B43E-B-G12	3192068
	G⅛	600 l/min	VHER-H-B43E-G18	3488206
	G¼	1150 l/min	VHER-H-B43E-G14	3515082
	G½	3200 l/min	VHER-H-B43E-G12	3192067

	Connection	Standard nominal flow rate	Type	Part no.
Polymer lever				
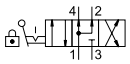	M5	260 l/min	VHER-P-H-B43U-B-M5	3410684
	G⅛	800 l/min	VHER-P-H-B43U-B-G18	3488217
	G¼	1500 l/min	VHER-P-H-B43U-B-G14	3515683
	G½	3800 l/min	VHER-P-H-B43U-B-G12	3192084
	M5	170 l/min	VHER-P-H-B43U-M5	3410683
	G⅛	600 l/min	VHER-P-H-B43U-G18	3488216
	G¼	1150 l/min	VHER-P-H-B43U-G14	3515573
	G½	3200 l/min	VHER-P-H-B43U-G12	3192082
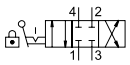	M5	260 l/min	VHER-P-H-B43C-B-M5	3410680
	G⅛	800 l/min	VHER-P-H-B43C-B-G18	3488209
	G¼	1500 l/min	VHER-P-H-B43C-B-G14	3515601
	G½	3800 l/min	VHER-P-H-B43C-B-G12	3192075
	M5	170 l/min	VHER-P-H-B43C-M5	3410679
	G⅛	600 l/min	VHER-P-H-B43C-G18	3488208
	G¼	1150 l/min	VHER-P-H-B43C-G14	3515361
	G½	3200 l/min	VHER-P-H-B43C-G12	3192074
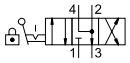	M5	260 l/min	VHER-P-H-B43E-B-M5	3410682
	G⅛	800 l/min	VHER-P-H-B43E-B-G18	3488211
	G¼	1500 l/min	VHER-P-H-B43E-B-G14	3515640
	G½	3800 l/min	VHER-P-H-B43E-B-G12	3192077
	M5	170 l/min	VHER-P-H-B43E-M5	3410681
	G⅛	600 l/min	VHER-P-H-B43E-G18	3488210
	G¼	1150 l/min	VHER-P-H-B43E-G14	3515542
	G½	3200 l/min	VHER-P-H-B43E-G12	3192076

FESTO

Ordering – Basic design, NPT thread

	Connection	Standard nominal flow rate	Type	Part no.
Metal lever				
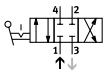	⅛ NPT	800 l/min	VHER-H-B43C-B-N18	3488213
	¼ NPT	1500 l/min	VHER-H-B43C-B-N14	3520389
	½ NPT	3800 l/min	VHER-H-B43C-B-N12	3192086
	⅛ NPT	600 l/min	VHER-H-B43C-N18	3488212
	¼ NPT	1150 l/min	VHER-H-B43C-N14	3520365
	½ NPT	3200 l/min	VHER-H-B43C-N12	3192085
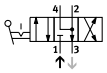	½ NPT	3800 l/min	VHER-H-B43E-B-N12	3192088
	½ NPT	3200 l/min	VHER-H-B43E-N12	3192087

Accessories

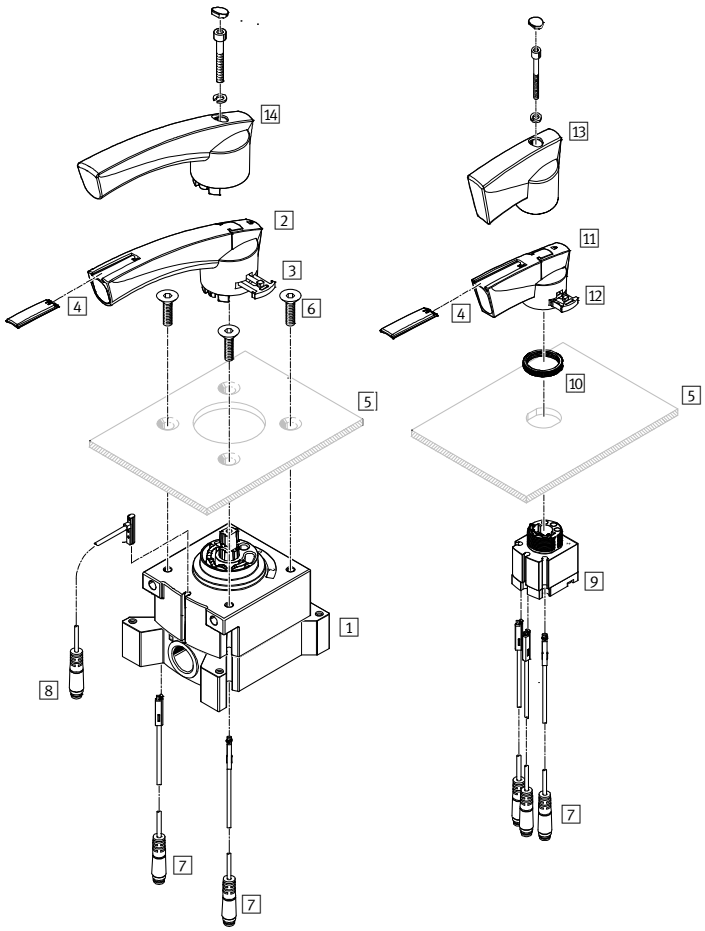

1 Hand lever valve VHER (lateral pneumatic connection) ➔ 141
2 Actuating lever, large, polymer
3 Lever mounting clip, large
4 Inscription label
5 Control panel (not included in the delivery)
6 Mounting screws (not included in the delivery)
7 Proximity sensor SM...-10-... -L-... (electrical connection, in-line outlet) ➔ 168
8 Proximity sensor SM...-10-... -Q-... (electrical connection, lateral outlet) ➔ sme-10
9 Hand lever valve VHER (pneumatic connections underneath) ➔ 141
10 Knurled nut, control panel mounting
11 Actuating lever, small, polymer
12 Lever mounting clip, small
13 Actuating lever, small, metal
14 Actuating lever, large, metal

7 **Proximity sensor, magnetic reed**		
Description	Type	Part no.
Cable, 2.5 m, 3-wire	SME-10M-DS-24V-E-2,5-L-OE	551365
Plug connector M8x1, 3-pin	SME-10M-DS-24V-E-0,3-L-M8D	551367

Pushbutton valves VHEM-P

FESTO

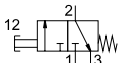

- Small and compact for a wide range of pneumatic applications
- Lightweight
- Minimal actuating forces
- Mounting either via through-hole or on front panel

Order code

001		002	003	004	005	006		007		008		009
VHEM	–	P					–		–		–	

Legend: Mandatory entry Optional entry

001	Type
VHEM	Manually operated valves

002	Actuation
P	Finger lever valve

003	Design
–	Piston spool
T	Disc seat

004	Control
–	Directly actuated
C	Pneumatically piloted

005	Pilot air supply port
–	Internal
Z	External

006	Switching function
–	Monostable valve
Z	Active (spring, bistable valve)

007	Valve function
M32C	3/2-way valve, monostable, normally closed
M32U	3/2-way valve, monostable, normally open
M52	5/2-way valve, monostable
B52	5/2-way valve, bistable

008	Type of reset
–	None
A	Internal pneumatic spring
E	External pneumatic spring
M	Mechanical spring

009	Pneumatic connection
G18	G⅛
G14	G¼

Ordering – Basic design

009 Connection	Nominal flow rate	005 Pilot air [1]	006 Valve function	007 Mechanical reset	Normal position	Description	Type	Part no.
G⅛	500 l/min	internal	3/2-way valve, monostable	■	Closed	–	VHEM-PTC-M32C-M-G18	558405
		external		■	Closed		VHEM-PTCZ-M32C-M-G18	558426
		internal		■	Open		VHEM-PTC-M32U-M-G18	558425
		external		■	Open		VHEM-PTCZ-M32U-M-G18	558411
		–	5/2-way valve, monostable	■	–	Suitable for vacuum, reversible	VHEM-P-M52-M-G18	558414
		–		–	–	Suitable for vacuum, reversible	VHEM-P-M52-E-G18	558419
		–		–	–	–	VHEM-P-M52-A-G18	558418
		–	5/2-way valve, bistable	■	–	Suitable for vacuum, reversible	VHEM-PA-B52-G18	558420
G¼	1000 l/min	–	5/2-way valve, monostable	■	–	Suitable for vacuum, reversible	VHEM-P-M52-M-G14	558421
		–		–	–	Suitable for vacuum, reversible	VHEM-P-M52-E-G14	558424
		–		–	–	–	VHEM-P-M52-A-G14	558423
		–	5/2-way valve, bistable	■	–	Suitable for vacuum	VHEM-PA-B52-G14	558422

1) With piloted valves

Piloted check valves HGL

FESTO

- Controlled, piloted non-return function
- Manual exhausting
- Rotatable when installed
- Push-in connector flow rate 130 … 1400 l/min
- Female thread flow rate 130 … 1600 l/min

1 HGL-M5-QS-4
2 HGL-…-QS
3 HGL-M5-B
4 HGL-…-B

Order code

001	002	003	004
HGL	–		–

Legend: Mandatory entry; Optional entry

001	Type
HGL	Check valve, piloted

002	Pneumatic port 2
M5	Male thread M5
1/8	Male thread G⅛
1/4	Male thread G¼
3/8	Male thread G⅜
1/2	Male thread G½

003	Pneumatic connection 1
–	Connection size as for connection 2, female thread
QS-4	Push-in connector for tubing O. D. 4 mm
QS-6	Push-in connector for tubing O. D. 6 mm
QS-8	Push-in connector for tubing O. D. 8 mm
QS-10	Push-in connector for tubing O. D. 10 mm
QS-12	Push-in connector for tubing O. D. 12 mm
1/8	Female thread G⅛

004	Generation
–	None
B	Optimised function

Ordering – Basic design

	002 Pneumatic connection 2	003 Pneumatic connection 1	Pilot air connection 21	Standard nominal flow rate qnN in flow direction at 6 bar 5 bar [l/min.]	Standard flow rate qn in flow direction at 6 bar 0 bar [l/min.]	Type	Part no.
Push-in/threaded connection							
1	M5	QS-4	QS-4	130	200	HGL-M5-QS-4	530038
2	G⅛	QS-4	M5	200	300	HGL-1/8-QS-6	530039
	G⅛	QS-6	M5	270	400	HGL-1/8-QS-6	530040
	G¼	QS-8	G⅛	390	640	HGL-1/4-QS-8	530041
	G¼	QS-10	G⅛	400	670	HGL-1/4-QS-10	530042
	G⅜	QS-8	G¼	830	1200	HGL-3/8-QS-8	530043
	G⅜	QS-10	G¼	890	1300	HGL-3/8-QS-10	530044
	G½	QS-12	G⅜	1400	2100	HGL-3/8-QS-12	530045
Threaded connection at both ends							
3	M5	M5	M5	130	200	HGL-M5-B	530029
4	G⅛	G⅛	M5	300	430	HGL-1/8-B	530030
	G¼	G¼	G⅛	550	680	HGL-1/4-B	530031
	G⅜	G⅜	G¼	1100	1500	HGL-3/8-B	530032
	G½	G½	G⅜	1600	2100	HGL-1/2-B	530033

Hand slide valves VBOH

FESTO

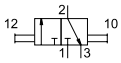

- Can be used as a shut-off function for pressurising and exhausting compressed air systems, e. g. upstream of service unit combinations, for air guns or for exhausting pneumatic cylinders
- Non-overlapping, so no pressure losses when switching
- Minimal installation
- Standard nominal flow rate 236 … 7691 l/min
- Operating pressure –0.95 … +12 bar
- Exclusive design

Order code

001		002		003		004
VBOH	–	32	–		–	

Legend: Mandatory entry Optional entry

001	Type
VBOH	Hand slide valve

002	Valve function
32	3/2-way valve, bistable

003	Pneumatic connection 1
M5	Female thread M5
G18	Female thread G⅛
G14	Female thread G¼
G38	Female thread G⅜
G12	Female thread G½
G34	Female thread G¾

004	Pneumatic connection 2
–	Same size as pneumatic connection 1

Ordering – Basic design

003 Pneumatic connection 1	004 Pneumatic connection 2	Nominal width [mm]	Standard nominal flow rate qnN [l/min]	Type	Part no.
M5	M5	3.6	236	VBOH-32-M5	1609969
G⅛	G⅛	5.7	777	VBOH-32-G18	1558073
G¼	G¼	8.4	1675	VBOH-32-G14	1302994
G⅜	G⅜	9.9	2201	VBOH-32-G38	1482679
G½	G½	12.1	3420	VBOH-32-G12	1587988
G¾	G¾	19.3	7691	VBOH-32-G34	1629664

One-way flow control valves VFOF

FESTO

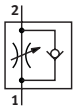

- Exhaust air one-way flow control function
- Minimal height
- Can be rotated horizontally through 360° in assembled state
- Greater functionality – function combinations with one-way flow control valve and delockable check valve
- Polymer design
- One-way flow control valve flow rate, standard 250 … 650 l/min Function combination flow rate 240 … 590 l/min

Order code – Check valve

001	002	003	004	005	006
VFOF	L	E	H		

001	Type
VFOF	One-way flow control valve, flat design

002	Design
L	L-shaped outlet

003	Valve function
E	Exhaust air one-way flow control function

004	Adjusting element
H	Internal hexagon

005	Pneumatic connection 2
G18	Male thread G⅛
G14	Male thread G¼

006	Pneumatic connection 1
Q6	Push-in connector 6 mm
Q8	Push-in connector 8 mm

Legend: ☐ Mandatory entry

Order code – Function combination

001	002	003	004	005	006	007
VFOF	L	E	BA	H		

001	Type
VFOF	One-way flow control valve, flat design

002	Design
L	L-shaped outlet

003	Valve function
E	Exhaust air one-way flow control function

004	Additional function
BA	Piloted non-return function, manual exhaust function

005	Adjusting element
H	Internal hexagon

006	Pneumatic connection 2
G18	Male thread G⅛
G14	Male thread G¼

007	Pneumatic connection 1
Q6	Push-in connector 6 mm
Q8	Push-in connector 8 mm

Legend: ☐ Mandatory entry

Ordering

One-way flow control valve VFOF, standard

006 **Pneumatic connection 2**	007 **Pneumatic connection 1**	Type	Part no.
G⅛	Push-in connector 6 mm	VFOF-LE-H-G18-Q6	1526931
G¼	Push-in connector 8 mm	VFOF-LE-H-G14-Q8	1505391

Ordering

One-way flow control valve VFOF, function combination

006 **Pneumatic connection 2**	007 **Pneumatic connection 1**	**Pilot air connection**	Type	Part no.
G⅛	Push-in connector 6 mm	Push-in connector 6 mm	VFOF-LE-BAH-G18-Q6	8001459
G¼	Push-in connector 8 mm	Push-in connector 8 mm	VFOF-LE-BAH-G14-Q8	1927030

One-way flow control valves GRLA, GRLZ

FESTO

1

2

- Sturdy metal design
- Can be swivelled 360° around the screw-in axis after mounting
- Push-in connector
- Flow rate 100 … 1580 l/min

1 GRLA-QS-D/GRLZ-QS-D: with slotted head screw
2 GRLA-QS-RS-D: with knurled screw

Order code

001	002	003	004	005	006	007
		QS				D

Legend: Mandatory entry; Optional entry

001	Type
GRLA	One-way flow control valve for exhaust air, elbow outlet
GRLZ	One-way flow control valve for supply air, elbow outlet

002	Pneumatic connection 2
M5	Male thread M5
1/8	Male thread G⅛
1/4	Male thread G¼
3/8	Male thread G⅜
1/2	Male thread G½

003	Pneumatic connection 1, connection type
QS	Push-in connector

004	Pneumatic connection 1, tubing O. D. [mm]
...	3, 4, 6, 8, 10, 12

005	Adjusting element
–	Slotted head screw
RS	Knurled screw

006	Additional function
–	None
MF	Precision flow control valve

007	Generation
D	D series

Product options

One-way flow control valves
- GRLSA Elbow outlet, with rotary knob
- GRGA Parallel outlet
- GR Straight design
- CRGRLA Stainless steel

Function combination
- GRXA Adjusting element slotted head screw

Pneumatic connection
- M3 Male thread M3
- QS-3 Push-in connector 3 mm

Ordering – Product options

Configurable product

This product and all its product options can be ordered using the configurator.

The configurator can be found under Products at
➔ **www.festo.com/catalogue/...**

Enter the type or the configuration part number in the search field.

Ordering

GRLA: with slotted head screw

Type	Part no.
GRLA-M5-QS-3-D	193137
GRLA-M5-QS-4-D	193138
GRLA-M5-QS-6-D	193139
GRLA-1/8-QS-3-D	193142
GRLA-1/8-QS-4-D	193143
GRLA-1/8-QS-6-D	193144
GRLA-1/8-QS-8-D	193145
GRLA-1/4-QS-6-D	193146
GRLA-1/4-QS-8-D	193147
GRLA-1/4-QS-10-D	193148
GRLA-3/8-QS-6-D	193149
GRLA-3/8-QS-8-D	193150
GRLA-3/8-QS-10-D	193151
GRLA-1/2-QS-12-D	193152

GRLA: with slotted head screw, precision flow control valve

Type	Part no.
GRLA-1/8-QS-6-MF-D	537075
GRLA-1/8-QS-8-MF-D	537076

GRLZ: with slotted head screw

Type	Part no.
GRLZ-M5-QS-3-D	193153
GRLZ-M5-QS-4-D	193154
GRLZ-M5-QS-6-D	193155
GRLZ-1/8-QS-3-D	193156
GRLZ-1/8-QS-4-D	193157
GRLZ-1/8-QS-6-D	193158
GRLZ-1/8-QS-8-D	193159

GRLA-RS: with knurled screw

Type	Part no.
GRLA-M5-QS-3-RS-D	197576
GRLA-M5-QS-4-RS-D	197577
GRLA-M5-QS-6-RS-D	197578
GRLA-1/8-QS-3-RS-D	197579
GRLA-1/8-QS-4-RS-D	197580
GRLA-1/8-QS-6-RS-D	197581
GRLA-1/8-QS-8-RS-D	534337
GRLA-1/4-QS-6-RS-D	534338
GRLA-1/4-QS-8-RS-D	534339
GRLA-1/4-QS-10-RS-D	534340
GRLA-3/8-QS-6-RS-D	534341
GRLA-3/8-QS-8-RS-D	534342
GRLA-3/8-QS-10-RS-D	534343
GRLA-3/8-QS-12-RS-D	534344

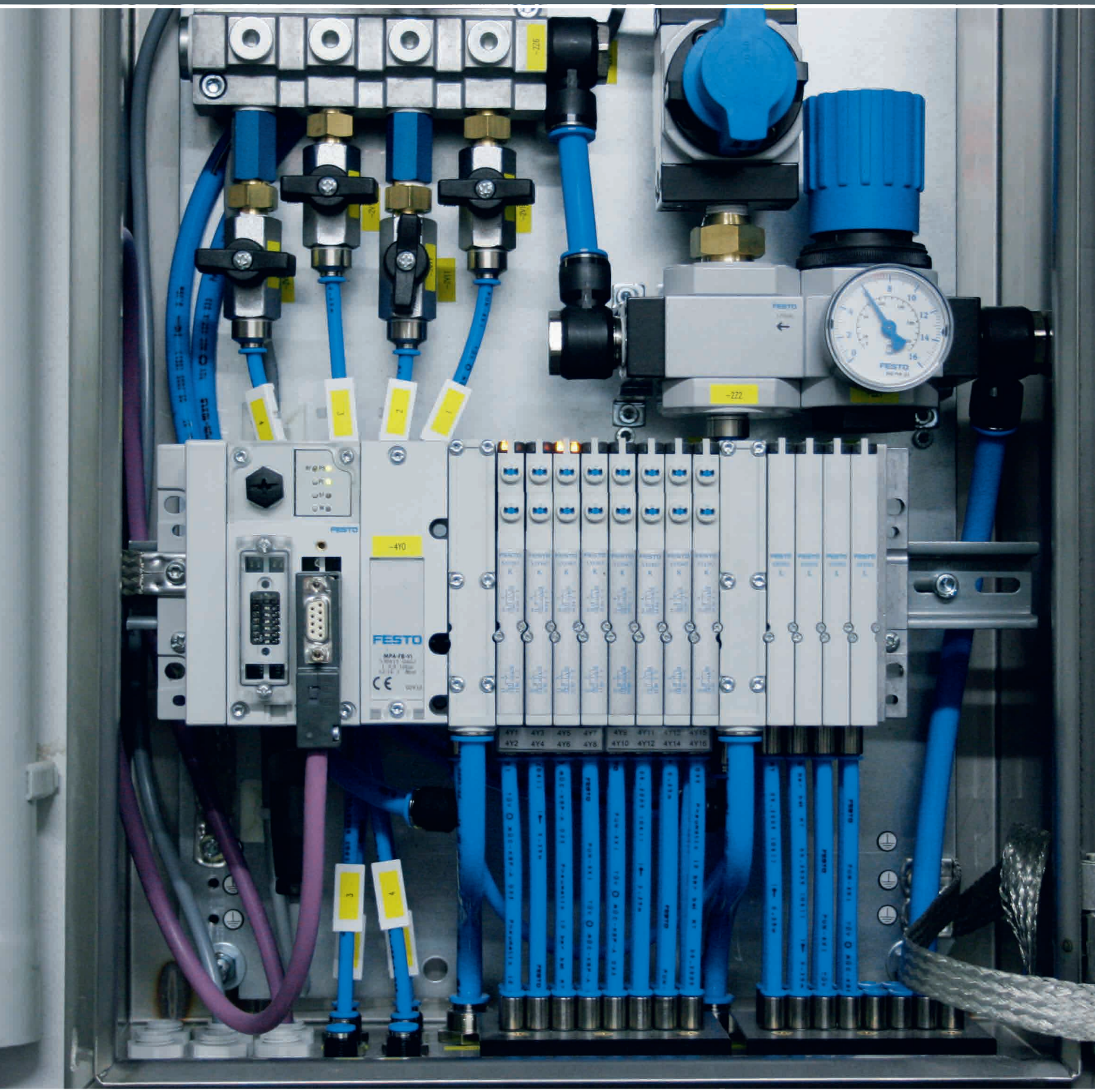

Valve terminals

08

Highlights

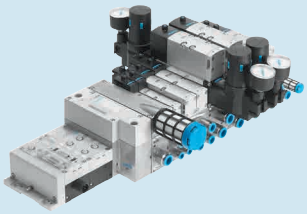

VTSA

Valve terminals, to ISO 15407-2, ISO 5599-2

+ Multi-pin plug connection or fieldbus connection via the CPX system
+ Five valve sizes can be combined on one valve terminal

Page 154

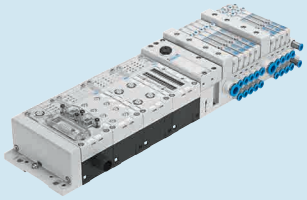

MPA S

Valve terminals

+ Highly flexible
+ Open to PROFIBUS-DP, INTERBUS®, CANopen, DeviceNet®, CC-LINK®

Page 158

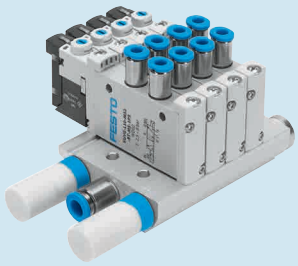

VTUG-S

Valve manifolds with individual electrical connection

+ Compact universal series
+ High flow rate

Page 151

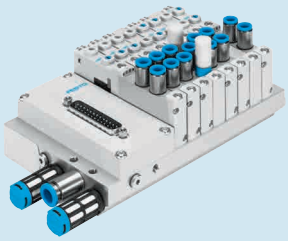

VTUG

Valve terminals with multi-pin plug or fieldbus connection

+ Energy-efficient thanks to reverse operation and targeted pressure reduction.
+ Especially suitable for control cabinet installation

Page 151

CPV

Valve terminals, Compact Performance

+ Cubic design for exceptional performance and low weight
+ Secure mounting on wall or H-rail

Page 152

FESTO

Contents

Product overview 151
Valve terminals VTSA, to ISO 15407-2, ISO 5599-2 154
Valve manifolds VTUS 157
Valve terminals MPA-S with CPX terminal 158

8

FESTO

Software tool

Product finder for valve terminals		Find the right valve terminal quickly with the help of the product finder. Start the product finder via the blue icons in the product tree. Select your technical features on the left-hand side step-by-step; the selection of suitable products on the right-hand side is automatically updated to reflect the chosen technical features.	The use of logic checks ensures that only correct configurations are available for selection. The product finder for valve terminals is part of the electronic catalogue and is not available as a separate software program. This tool can be found in the electronic catalogue by clicking on the blue button "Product Finder".

Standards-based valve terminals

	 Valve terminals, to ISO 15407-2/ISO 5599-2 **VTSA**
Width	18 mm, 26 mm, 42 mm, 52 mm, 65 mm
Max. standard nominal flow rate	1100 l/min at 26 mm, 1300 l/min at 42 mm, 2900 l/min at 52 mm, 4000 l/min at 65 mm, 550 l/min at 18 mm
Max.no. of valve positions	32
Electrical actuation	Ethernet, fieldbus, multi-pin plug, electrical terminal CPX, integrated controller, individual connection, AS-Interface® connection
Valve terminal design	Modular, valve sizes can be mixed
Description	• Conforms to ISO 15407-2/ ISO 5599-2 • Multi-pin plug connection or fieldbus connection via the CPX system • Five valve sizes can be combined on one valve terminal • Integrated safety functions
➔ Page/online	**154**

Universal valve terminals

	 Valve manifolds **VTUS**	 **Valve manifolds with individual electrical connection** **VTUG-S**	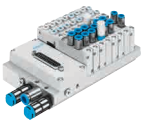 **Valve terminals with multi-pin plug or fieldbus connection** **VTUG**	 **Valve terminals** **MPA-L**
Width	21, 26.5, 30	10, 14, 18	10, 14, 18	10, 14, 20
Standard nominal flow rate	600... 2300 l/min	1380 l/min at 18 mm, 380 l/min at 10 mm, 780 l/min at 14 mm	1200 l/min at 18 mm, 330 l/min at 10 mm, 630 l/min at 14 mm	360 l/min at 10 mm, 670 l/min at 14 mm, 870 l/min at 20 mm
Max.no. of valve positions	16	16	24	32
Electrical actuation	Individual connection	Individual connection	Multi-pin plug, I-Port interface, IO-Link®, fieldbus	Fieldbus, multi-pin plug, electrical terminal CPX, IO-Link®, I-Port
Valve terminal design	Fixed grid	Fixed grid	Fixed grid	Modular, valve sizes can be mixed
Description	• Robust valves with long service life VUVS • Individual electrical connection • Pilot air supply in the manifold rail • Comprehensive range of accessories	• Compact with small valves VUVG • Connection technology easy to change via the E-box • Wide range of valve functions • Also with semi in-line valves	• Low-cost fixed grid • Extremely easy assembly • Exchangeable electrical actuation • IO-Link® capable • Valves VUVG with individual electrical connection can be integrated • Also available with pneumatic multiple connector plate	• Maximum modularity • Individual granularity • Polymer sub-base • Three valve sizes • Fieldbus connection via CPX • IO-Link® capable
➔ Page/online	**157**	**vtus-s**	**vtug**	**mpa-l**

8

FESTO

Universal valve terminals

	Valve terminals MPA-S	Valve terminals VTSA-F	Valve terminals, Compact Performance CPV
Width	10, 20	18, 26, 42, 52, 65	10, 14, 18
Standard nominal flow rate	360 l/min at 10 mm, 700 l/min at 20 mm	700 l/min at 18 mm, 1350 l/min at 26 mm, 1860 l/min at 42 mm, 2900 l/min at 52 mm, 4000 l/min at 65 mm	400 l/min at 10 mm, 800 l/min at 14 mm, 1600 l/min at 18 mm
Max.no. of valve positions	64	32	8
Electrical actuation	Fieldbus, multi-pin plug, electrical terminal CPX, AS-Interface®, CP installation system	Ethernet, fieldbus, multi-pin plug, electrical terminal CPX, integrated controller, AS-Interface® connection	AS-Interface®, CP installation system, individual connection, fieldbus, multi-pin plug
Valve terminal design	Modular, valve sizes can be mixed	Modular, valve sizes can be mixed	Fixed grid
Description	• Valve terminals for universal applications • High-performance valves in a sturdy metal housing • Metal linking • Two valve sizes can be combined • Excellent communication thanks to serial linking • Fieldbus connection via CPX	• Flow rate-optimised valve terminal VTSA • Linking with increased flow rates • Functions as with standards-based valve terminal VTSA	• Maximum performance in the smallest of spaces • Three sizes • Wide range of connection and mounting options • Multi-pin or fieldbus control • IO-Link® capable
➔ Page/online	**158**	**vtsa**	**cpv**

8

FESTO

Electrical peripherals

	Fieldbus modules CTEU Installation system CTEL	Terminal CPX
Protocol	AS-Interface®, CANopen, CC-LINK®, DeviceNet®, EtherCAT, PROFINET, PROFIBUS DP, CPI-B	INTERBUS®, DeviceNet®, PROFIBUS, CANopen, CC-LINK®, EtherNet/IP, PROFINET, EtherCAT, ModbusTCP
Max. address volume for inputs	2 … 64 bytes	64 bytes
Max. address volume for outputs	2 … 64 bytes	64 bytes
Parameterisation	Activate diagnostics, diagnostic behaviour, failsafe and idle response, failsafe response, watchdog disable, watchdog enable	Diagnostic behaviour, failsafe response, forcing of channels, signal setup
Degree of protection	IP65, IP67	IP65, IP67
Nominal operating voltage DC	24 … 30 V	24 V
Operating voltage range DC	18 … 31.6 V	18 … 30 V
Description	• For valve terminals VTUB-12, VTUG, MPA-L, CPV, VTOC • Can be expanded into installation system CTEL • Fieldbus-typical LEDs, interfaces and switching elements available • Isolated power supply for electronics and valves	• Automation platform • Open to all common fieldbus protocols and Ethernet • Integrated diagnostic and maintenance functions • Applicable as stand-alone remote I/O or with valve terminals MPA-S, MPA-L, VTSA/VTSA-F • Choice of polymer or metal housing with individual linking
➔ **Page/online**	cteu	cpx

Customised components – for your specific requirements

Valve terminals with customised designs
Can't find the valve terminal you need in our catalogue? We can offer you customised components that are tailored to your specific requirements.

Common product modifications:
- Coatings for special ambient conditions
- Customised cables: length, pin allocation, pre-assembled with plug
- Modified actuating elements
- Modified connecting thread
- Modified valve sub-bases

Many additional variants are possible. Ask your Festo sales engineer, who will be happy to help.
➔ **www.festo.com/contact**

8

Valve terminals VTSA, to ISO 15407-2, ISO 5599-2

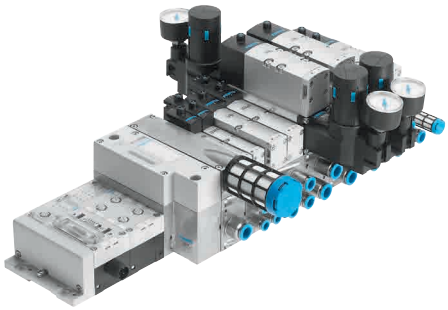

- Sturdy and flexible valve terminal
- Widths 18 and 26 mm: ISO 15407-2, widths 42 and 52 mm: ISO 5599-2
- Widths of 18 mm, 26 mm, 42 mm and 52 mm can be combined on one valve terminal without an adapter
- Complete and standardised valve range
- Wide range of vertical stacking modules: pressure regulator, flow control, vertical pressure shut-off plate, etc.
- Integrated safety functions
- Flow rate: 550 … 2900 l/min
- Flow-optimised version VTSA-F: 700 … 4000 l/min
- High pressure range: –0.9 … 10 bar

Key features

Innovative
- High-performance valves in a sturdy metal housing
- Five valve sizes on one valve terminal (width 65 mm with adapter)
- Standardised from the multi-pin plug to the fieldbus connection and control block
- Dream team: fieldbus valve terminal suitable for electrical peripherals CPX. This means:
  - Forward-looking internal communication system for controlling the valves and CPX modules
  - Four valve sizes on one valve terminal without adapters
- Valve functions for integration in control architectures of higher categories to EN ISO 13849-1

Flexible
- Modular system offering a range of configuration options
- Expandable with up to 32 solenoid coils
- Conversions and extensions are possible at any time
- Manifold sub-bases can be extended using four screws, sturdy duct separation on metal support
- Integration of innovative function modules possible
- Supply plates enable a flexible air supply and variable pressure zones
- Reverse operation
- High pressure range –0.9 … 10 bar, flow range 550 … 4000 l/min
- Wide range of valve functions
- Valve supply 24 V DC or 110 V AC

Reliable
- Sturdy and durable metal components
  - Valves
  - Manifold sub-bases
  - Seals
- Fast troubleshooting thanks to LEDs on the valves and diagnostics via fieldbus
- Reliable servicing thanks to valves that can be replaced quickly and easily
- Manual override, either non-detenting, non-detenting/detenting or covered
- Durable thanks to tried-and-tested piston spool valves
- Large and durable labelling system
- 100% duty cycle

Easy to install
- Ready-to-install and tested unit
- Reduced outlay on selection, ordering, installation and commissioning
- Secure mounting on wall or H-rail

Electrical connection options

Multi-pin plug connection

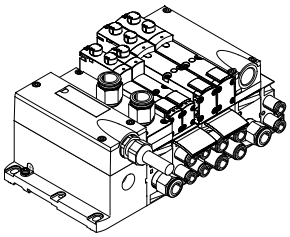

Control signals from the controller to the valve terminal are transmitted via a pre-assembled multi-wire connecting cable or a self-assembled multi-pin plug connection, which substantially reduces installation time.
The valve terminals can be equipped with max. 32 valves with max. 32 solenoid coils.

Versions
- Multi-pin plug connection with terminal strip (spring-loaded terminal)
- Connecting cable for multi-pin plug connections, fully assembled (Sub-D)
- Sub-D plug connector for assembly by the user, 37-pin
- Round plug connector M23, 19-pin

AS-Interface® connection

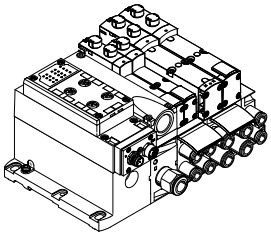

A special feature of the AS-Interface® is the simultaneous transmission of data and supply power via a two-wire cable. The encoded cable profile prevents connection with incorrect polarity.
The valve terminal with AS-Interface® is available in the following versions:

- With one to eight modular valve positions (max. 8 solenoid coils). This corresponds to 1 to 8 VTSA valves.
- With all available valve functions.

The connection technology used for the inputs can be selected as with CPX: M8, M12, quick connector, Sub-D, spring-loaded terminal (terminals to IP20).

FESTO

Key features

Electrical connection options

Fieldbus connection via the CPX system

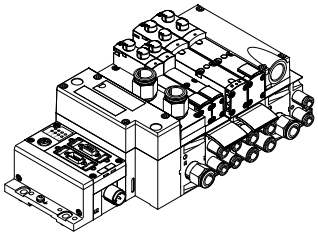

An integrated fieldbus node manages the communications connection with a higher-order PLC. This enables a space-saving pneumatic and electronic solution.
Valve terminals with fieldbus interfaces can be configured with up to 16 manifold sub-bases. With 2 solenoid coils per connection, up to 32 solenoid coils can thus be actuated.

Versions:
PROFIBUS, INTERBUS®, DeviceNet®, CANopen, CC-LINK®, EtherNet/IP, EtherCAT, Modbus® TCP, PROFINET, POWERLINK, Sercos III

Control block connection via the CPX system

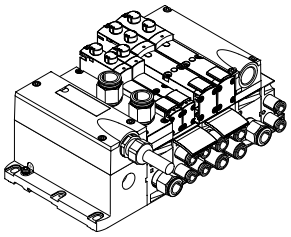

A controller integrated in the Festo valve terminal enables the construction of stand-alone control units with protection to IP65 without a control cabinet thanks to two different operating modes.

In the slave operating mode, these valve terminals can be used for intelligent preprocessing and are therefore ideal modules for designs using decentralised intelligence.

In the master operating mode, terminal groups can be designed with many options and functions that can autonomously control a medium-sized machine/system.

CP string extension

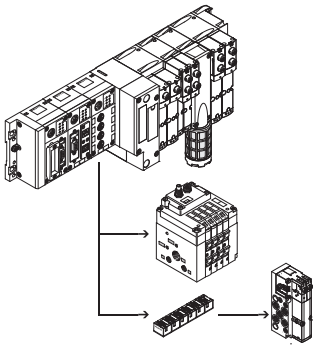

The optional CP string extension enables additional valve terminals and I/O modules to be connected to the fieldbus node of the CPX terminal on up to four CP strings. Different input and output modules as well as CPV-SC and CPV valve terminals can be connected. The maximum length of the CP string extension is 10 metres, which means that the extension modules can be mounted directly on-site. All the required electrical signals are transmitted via the CP cable, which in turn means that no further installation is needed on the extension module.

One CP string offers:
- 32 input signals
- 32 output signals for output modules 24 V DC or solenoid coils
- Logic and sensor supply for the input modules
- Load voltage supply for the valve terminals
- Logic supply for the output module

Control block with safety function, width 26 mm

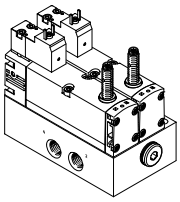

These valves are used for special applications, for example for:
- Protecting against unexpected start-up
- Safe reversing
- Drives in manually loaded devices

This control block is suitable for use as a press safety valve to EN 962.
This valve is a safety device in accordance with the Machinery Directive 2006/42/EC.

Valve terminals VTSA, to ISO 15407-2, ISO 5599-2

FESTO

Key features

Modular pneumatic components

The modular design of the VTSA/VTSA-F enables maximum flexibility right from the planning stage and offers maximum ease of service in operation.
The system consists of manifold sub-bases and valves.
The manifold sub-bases are screwed together and thus form the support system for the valves.

Inside the manifold sub-bases are the ducts for supplying compressed air to and exhausting from the valves on the terminal as well as the working ports for the pneumatic cylinders for each valve.
Each manifold sub-base is connected to the next using four screws.
Individual valve terminal sections can be isolated and further blocks easily inserted by loosening these screws. This ensures that the valve terminal can be rapidly and reliably extended.

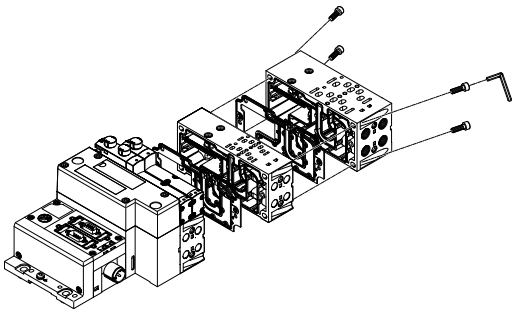

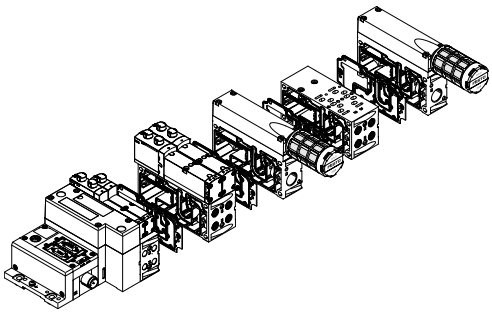

Modular electrical peripherals

The manner in which the valves are actuated differs according to whether you are using a multi-pin terminal or fieldbus terminal.
The VTSA/VTSA-F with CPX interface is based on the internal bus system of the CPX terminal and uses this communication system for all solenoid coils and a range of electrical input and output functions.

Parallel linking enables the following:
- Transmission of switching information
- Compact design
- Position-based diagnostics
- Separate voltage supply for valves
- Flexible conversion without address shifting
- Transmission of status, parameter and diagnostic data

VTSA with electrical peripherals CPX

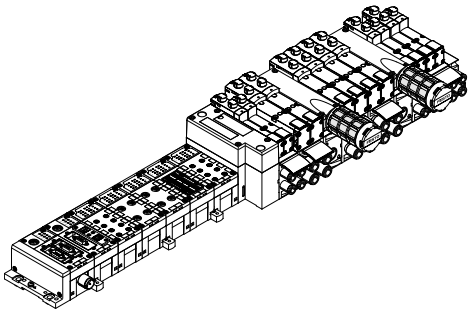

Modularity with electrical peripherals CPX

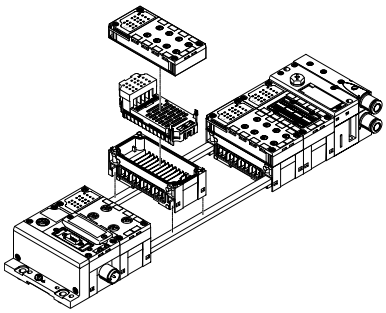

Technical data online ➔ www.festo.com/catalogue/vtsa

Ordering

Configurable product

This product and all its product options can be ordered using the configurator.

The configurator can be found under Products at
➔ www.festo.com/catalogue/...

Enter the type or the configuration part number in the search field.

Configuration part no.

Valve terminal, electrical part	Connecting thread	Type	Part no.
Valve terminal VTSA, conforms to ISO 15407-2 / ISO 5599-2			
Valve terminal VTSA with multi-pin plug connection	Metric	VTSA-MP	539215
Valve terminal VTSA with CPX terminal	Metric	VTSA-FB	539217
	NPT	VTSA-FB-NPT	539218

Valve terminal, electrical part	Connecting thread	Type	Part no.
Valve terminal VTSA-F, flow-optimised version			
Valve terminal VTSA-F with multi-pin plug connection	Metric	VTSA-F-MP	547963
	NPT	VTSA-F-MP-NPT	547964
Valve terminal VTSA-F with CPX terminal	Metric	VTSA-F-FB	547965
	NPT	VTSA-F-FB-NPT	547966

The valve terminals are fully assembled according to your order specification and are individually checked. This reduces assembly and installation time to a minimum.

FESTO

- Robust valves with long service life VUVS ➔ 132
- Individual electrical connection
- Pilot air supply in the manifold rail
- Comprehensive range of accessories
- Flow rate 600 … 2300 l/min
- Sizes 20, 25, 30
- Pressure range –0.9 … 10 bar

Key features

Innovative
- A reliable, heavy-duty valve with a long service life
- Flow rate up to 2300 l/min
- Low-cost universal valve with no performance limitations
- Wide range of valve functions

Flexible
- Operating voltage can be easily altered by changing the solenoid coil
- In-line valves can be used as individual valves or manifold valves
- Variable pressure zones
- Wide range of mounting options

Reliable
- Durable thanks to tried and tested piston spools
- Reliable servicing thanks to valves that can be replaced quickly and easily

Easy to install
- Pre-assembled units on rails
- Individual valves assembled ready for installation
- Common supply manifolds for mounting on one or both sides
- Secure mounting on wall or H-rail

Valve functions
- Internal/external pilot air supply
- Reset via pneumatic/mechanical spring
- Direction of flow can be reversed in the case of external pilot air supply

3/2-way valve, normally closed, single solenoid:
- Internal/external pilot air supply
- Reset via pneumatic/mechanical spring
- Direction of flow can be reversed in the case of external pilot air supply

5/2-way valve, single solenoid:
- Internal/external pilot air supply
- Reset via pneumatic/mechanical spring
- Direction of flow can be reversed in the case of external pilot air supply

5/2-way valve, double solenoid:
- Internal/external pilot air supply
- Direction of flow can be reversed in the case of external pilot air supply

5/3-way valve, mid-position exhausted, pressurised or closed:
- Internal/external pilot air supply
- Reset via mechanical spring
- Direction of flow can be reversed in the case of external pilot air supply

Versions
- A maximum of 16 valve positions can be configured in the standard version
- A maximum of 12 valve positions can be configured in the compact version
- Valve positions 2 … 10 can be configured in increments of 1, valve positions 10 … 16 in increments of 2
- Manifold block with a maximum of 10 valve positions
- Extension module with 2 valve positions
- Common supply manifold with a maximum of 10 valve positions
- Creation of pressure zones (maximum 9 pressure zones in the case of a valve manifold with 16 valve positions)

Ordering

Configurable product

This product and all its product options can be ordered using the configurator.

The configurator can be found under Products at
➔ **www.festo.com/catalogue/...**

Enter the type or the configuration part number in the search field.

Configuration part no.

Standard nominal flow rate	Size	Type	Part no.
600 … 700 l/min	20	VTUS-20	577304
1000 … 1300 l/min	25	VTUS-25	8022016
1600 … 2300 l/min	30	VTUS-30	8022019

The valve manifold is fully assembled according to your order specification and individually checked. This reduces assembly and installation time to a minimum.

Valve terminals MPA-S with CPX terminal

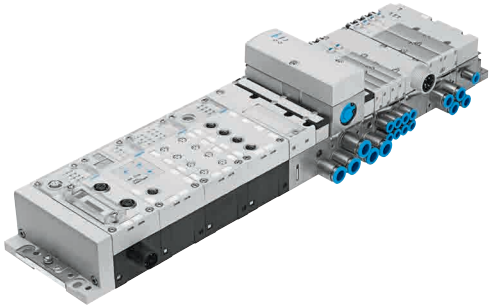

- Actuated via fieldbus or control block
- Max. 64 valve positions/max. 128 solenoid coils
- Digital inputs/outputs
- Analogue inputs/outputs
- Parameterisation of inputs and outputs
- Integrated convenient diagnostic system
- Proportional technology
- Integrated, high-level diagnostics thanks to serial linking
- Up to 8 voltage zones
- Flow rate 360 … 700 l/min
- Width 10 mm, 20 mm
- Pressure range 0.9 … 10 bar

Key features

Innovative
- Compact high-performance valves in sturdy metal housing
- MPA1 Flow rates of up to 360 l/min
- MPA2 Flow rates of up to 700 l/min
- Dream team: fieldbus valve terminal suitable for electrical peripherals CPX. This means:
  - Forward-looking internal communication system for actuating the valves and CPX modules
  - Diagnostics down to the individual valve
  - Valves can be actuated with or without (standard) separate electrical circuits

Flexible
- Modular system offering a range of configuration options
- Expandable with up to 128 solenoid coils
- Conversions and extensions possible at a later date
- Sub-bases can be expanded using just three screws, sturdy separating seals on metal separator plates
- Integration of innovative function modules possible
- Proportional pressure regulators
- Pressure sensor
- Supply plates enable a flexible air supply and variable pressure zones
- Wide range of pressures –0.9 … 10 bar
- Wide range of valve functions

Reliable
- Fast troubleshooting thanks to LEDs on the valves and diagnostics via fieldbus
- High operating voltage tolerance ±25%
- Reliable servicing through replaceable valves and electronics modules
- Manual override either non-detenting, detenting or secured against unauthorised activation (covered)
- Durable thanks to tried-and-tested piston spool valves
- Large and durable labelling system, suitable for barcodes

Easy to install
- Ready-to-install and tested unit
- Reduced outlay on selection, ordering, installation and commissioning
- Secure mounting on wall or H-rail

Electrical connection options

Fieldbus connection via the CPX system

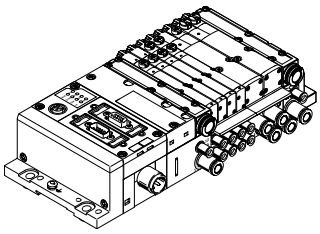

An integrated fieldbus node manages the communications connection with a higher-order PLC. This enables a space-saving pneumatic and electronic solution.
Valve terminals with fieldbus interfaces can be configured with up to 16 manifold blocks. In conjunction with MPA1 and 8 solenoid coils per sub-base, up to 128 solenoid coils can thus be actuated. An MPA2 with 4 solenoid coils per sub-base can actuate 64 solenoid coils.

Versions:
PROFIBUS-DP, INTERBUS®, DeviceNet®, CANopen, CC-LINK®, EtherNet/IP, EtherCAT, Modbus®/TCP, PROFINET, POWERLINK, Sercos III, Front End Controller Remote, Front End Controller, Remote I/O, CPX terminal

Control block connection via the CPX system

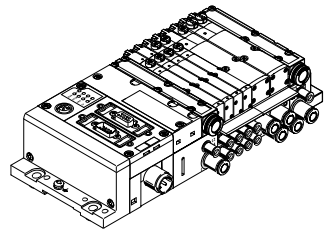

A controller integrated in the Festo valve terminal enables the construction of stand-alone control units with protection to IP65 without a control cabinet.

In the slave operating mode, these valve terminals can be used for intelligent preprocessing and are therefore ideal modules for designs using decentralised intelligence.

In the master operating mode, terminal groups can be designed with many options and functions that can autonomously control a medium-sized machine/system.

FESTO

Ordering

Configurable product	**This product and all its product options can be ordered using the configurator.**	The configurator can be found under Products at ➔ **www.festo.com/catalogue/...**	Enter the type or the configuration part number in the search field.

Configuration part no.	Type	Part no.
Valve terminal MPA with fieldbus connection	MPA-FB-VI	530411

The valve terminals are fully assembled according to your order specification and are individually checked. This reduces assembly and installation time to a minimum.

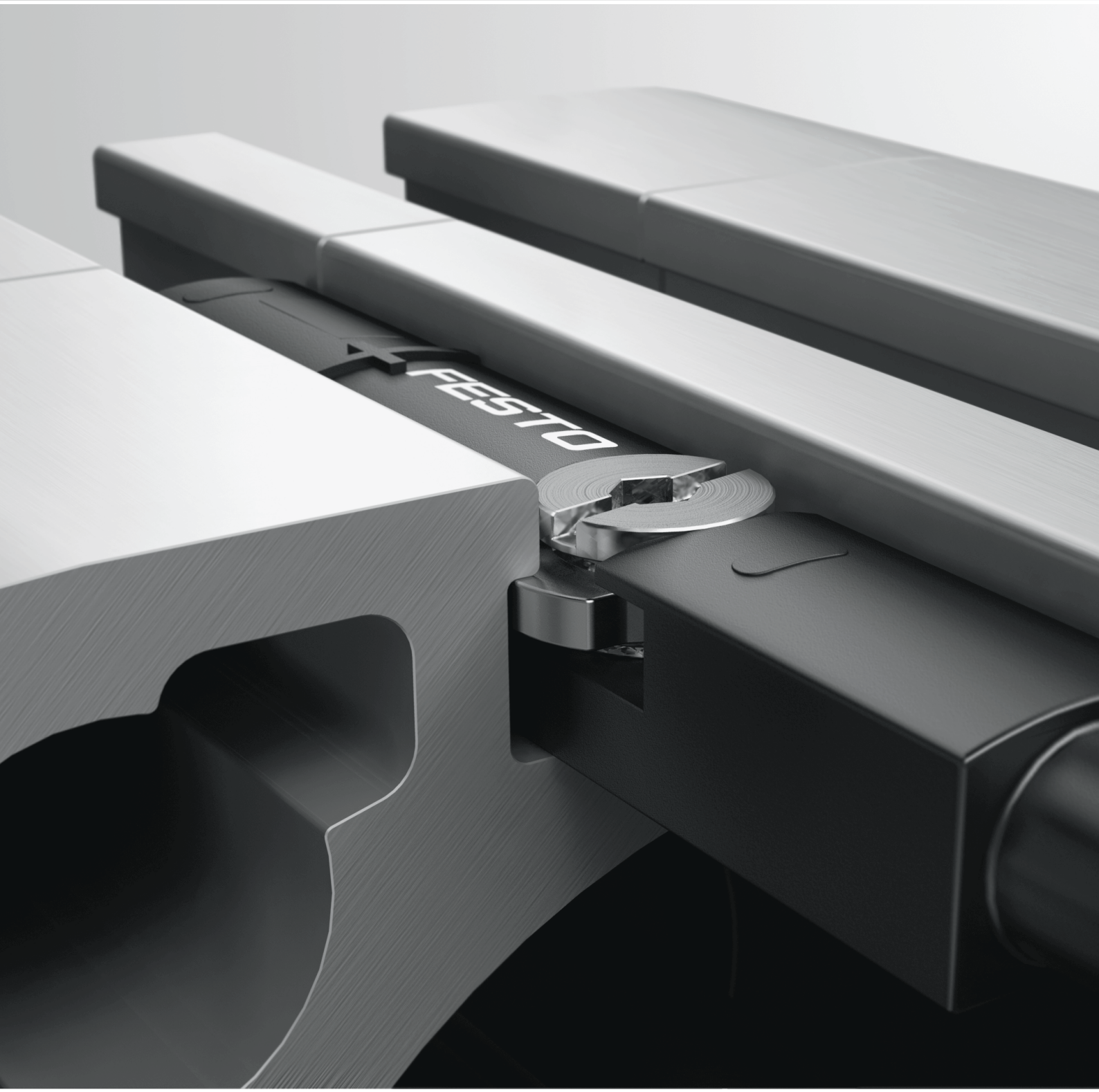

Sensors

09

Highlights

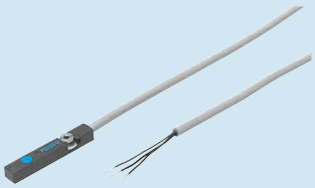

SME-8M
SMT-8M

Proximity sensors, for T-slot

+ Short design
+ Variants suitable for use with energy chains and robots

Page 166

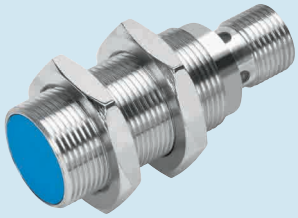

SIEN

Proximity sensors, inductive

+ PNP, NPN
+ Flush or non-flush mounting
+ Standards-based switching distance

Page 170

SDE5

Pressure sensors

+ Pressure switches
+ Vacuum switches
+ Switching status indicated by an LED visible from all sides

Page 174

9

Contents

Product overview 163
Proximity sensors SME-/SMT-8M, for T-slot 166
Proximity sensors SME/SMT-10M, for C-slot 168
Proximity sensors SIEN, inductive 170
Position sensors SRBS 172
Pressure sensors SPAE 173
Pressure sensors SDE5 174

FESTO

Software tool

Configurator	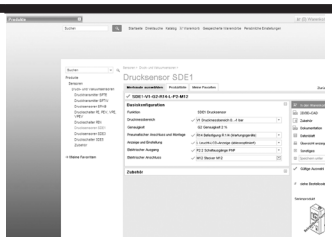	Design a product with numerous features reliably and quickly with the help of the configurator. Select all the required product features step-by-step. The use of logic checks ensures that only correct configurations are available for selection.	The configurator is part of the electronic catalogue and is not available as a separate software program.
Festo Design Tool 3D FDT 3D	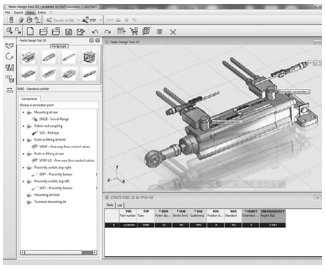	The Festo Design Tool 3D is a 3D product configurator for generating specific CAD product combinations from Festo. The configurator makes your search for the right accessory easier, more reliable and faster. You can then order the module that has been created as a single order item – either completely pre-assembled or as individual parts in a single box. As a result, your bill of materials is considerably shortened and downstream processes such as product ordering, order picking and assembly are significantly simplified.	All ordering options are available in the following countries: AT, BE, CH, CZ, DE, DK, ES, EST, FI, FR, GB, GR, HU, IE, IT, NL, NO, PL, PT, RU, SE, SI, SK, TR, ZA. This tool can be found • either via the address: www.festo.com/FDT-3D in the above listed countries.

Proximity sensors, for T-slot

	 Proximity sensors **SMT-8M-A**	 **Proximity sensors** **SME-8, SME-8M**
Electrical connection	2-wire, 3-wire, 2-pin, 3-pin, cable, cable with plug, M8x1, M12x1, rotatable thread	2-wire, 3-wire, 3-pin, cable, cable with plug, M8x1, snap-on flange, plug
Operating voltage range DC	5 … 30 V	0 … 230 V
Switching element function	N/C contact, N/C contact or N/O contact, switchable, N/O contact	N/O contact, N/C contact
Switching output	Non-contacting, 2-wire, NPN, PNP, PNP/NPN switchable	Contacting, bipolar, without LED function
Description	• Measuring principle: magneto-resistive • Short design • Variant Ex2 for use in potentially explosive areas • Insertable in the slot from above, flush with the cylinder profile • LED switching status indication • LED operating reserve indication • Cable length 0.1 … 30 m	• Measuring principle: magnetic reed • SME-8-…-S6: heat-resistant design • Variants suitable for use with energy chains and robots • Screw-clamped or clamped in slot, insertable in the slot from above or lengthwise • LED switching status indication • Cable length 0.3, 2.5, 5, 7.5, 0.2 … 10 m
➔ Page/online	**166**	**166**

9

FESTO

Proximity sensors, for C-slot

	Proximity sensors SME-10, SME-10M	Proximity sensors SMT-10M, SMT-10G
Electrical connection	2-pin, 3-pin, 3-wire, cable, cable with plug, M12, M8x1, snap-on flange, plug, rotatable thread, open end	2-pin, 3-pin, 3-wire, cable, cable with plug, M12, M8x1, snap-on flange, rotatable thread, open end
Operating voltage range DC	5 ... 30 V	5 ... 30 V
Switching element function	N/O contact	N/O contact
Switching output	Contacting, bipolar	NPN, PNP, non-contacting, 2-wire
Description	• Measuring principle: magnetic reed • Clamped in C-slot, insertable in the slot from above or lengthwise • LED switching status indication • Cable length 0.3, 2.5 m	• Measuring principle: magneto-resistive • Clamped in C-slot, insertable in the slot from above or lengthwise • LED switching status indication • Cable length 0.3, 2.5 m
➔ Page/online	**168**	**168**

Inductive sensors

	Proximity sensors SIEN
Size	4 mm, 6.5 mm, M5x0.5, M8x1, M12, M12x1, M18, M18x1, M30, M30x1.5
Switching output	NPN, PNP
Switching element function	N/O contact, N/C contact
Electrical connection	3-wire, 3-pin, cable, M8x1, M12x1, plug
Operating voltage range DC	10 ... 30 V
Description	• With standards-based switching distance • For DC voltage • Round design • Metric thread • Flush or non-flush mounting • LED switching status indication • Design with metal or polyamide housing
➔ Page/online	**170**

Position sensors

	Position sensors SRBS
Design	Round
Position measuring range	›270°
Analogue output	50 mA
Electrical connection	4-pin, cable with plug, M8, rotatable thread
Description	• Used to detect rotation of the shaft on semi-rotary drives DRVS and DSM • The sensor can be quickly assembled without having to manually search for switching points • Simple and reliable operation using just one pushbutton directly on the device
➔ Page/online	**172**

FESTO

Pressure and vacuum sensors

	Pressure sensors SPAE	Pressure sensors SPAU	Pressure switches, vacuum switches PEV, VPEV	Pressure sensors SDE5
Pressure measuring range	–1 ... 10 bar	–1 ... 16 bar	–1 ... 10 bar	–1 ... 10 bar
Switching element function	N/O contact, switchable, N/C contact	N/C or N/O contact, switchable	Changeover switch	N/O contact, switchable, N/C contact
Pneumatic connection	Flange, QS-3, QS-4, push-in sleeve QS-4, push-in sleeve QS-6	G1/8, M5, M7, NPT1/8-27, QS-4, QS-5/32, QS-6, R1/4, R1/8	G1/8, G1/4, M5	QS-5/32, QS-1/4, QS-4, QS-6
Electrical connection	3-wire, cable, open end	4-pin, M12x1, M8x1, plug, to EN 60947-5-2, round design	4-pin, type A, M8x1, M12x1, screw terminal, plug, to DIN 43650, to EN 6094752, round design, square design	3-wire, 3-pin, cable, M8x1, plug, to EN 6094752, round design
Display type	LED display, 2-digit	LED, illuminated LCD		
Description	• Electronic pressure sensor with piezoresistive pressure measuring cell, integrated signal processing, numeric pressure indicator in percent, operating key and a switching output, PNP/NPN switchable • Display of minimum and maximum readings • All parameters entered can be transferred to other SPAEs (replicator function)	• For monitoring compressed air and non-corrosive gases • With and without display • Transfer of the pressure value as switching signal, analogue signal or via IO-Link® to the connected control system	• Mechanical pressure and vacuum switch • Adjustable switching point • Mounting: screw-in, via through-holes or via H-rail • Visual scale for pressure adjustment • Certification: CCC	• Programmable and configurable pressure switch for simple pressure sensing tasks • Threshold/window comparator • Switching point adjustment by teach-in function • Integrated microprocessor • Switching status indicated by an LED visible from all sides • Certification: c UL us Listed (OL), C-Tick
➔ Page/online	**173**	**spau**	**pev**	**174**

Sensor boxes

	Sensor boxes SRBC	Sensor boxes SRBE
Information on housing materials	Die-cast aluminium	Die-cast aluminium
Operating voltage range AC	0 ... 250 V	0 ... 250 V
Operating voltage range DC	0 ... 175 V	0 ...60 V
Measuring principle	Inductive, magnetic reed, mechanical/electrical, for proximity sensor	Inductive, magnetic reed, mechanical/electrical, for proximity sensor
Switching element function	N/C contact, N/O contact, toggle switch, single-pole	
Description	• Pre-assembled mounting adapter for ease of installation • The trip cams can be set easily without additional tools • Sturdy, corrosion-resistant design, ideal for use in harsh operating conditions • Clearly visible 3D position indicator allows rapid detection of the current position of the quarter turn actuator	• Trip cams can be set easily without additional tools • Sturdy, corrosion-resistant design, ideal for use in harsh operating conditions • Clearly visible 3D position indicator allows rapid detection of the current position of the quarter turn actuator
➔ Page/online	**255**	**srbe**

Proximity sensors SME-/SMT-8M, for T-slot

FESTO

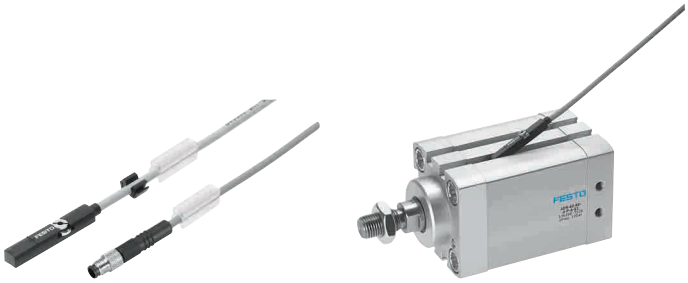

- Switching output via reed contact or non-contacting
- Insertable in the slot from above, does not protrude over the cylinder profile
- Variant suitable for use with energy chains and robots
- Cable clip and inscription labels included in the scope of delivery
- With switching status indication
- Selected types in accordance with ATEX directive for potentially explosive atmospheres
  ➔ **www.festo.com/en/ex**

Order code

001	002	003	004	005	006	007	008	009	010
	8M			24 V					

Legend: Mandatory entry; Optional entry

001	Type
SME	Proximity sensor, magnetic reed
SMT	Proximity sensor, magneto-resistive

002	Design
8M	For T-slot, insertable in the slot from above

003	Design
–	Standard
C	Short design

004	Switching output, switching element function
DS	N/O contact, 3-wire
ZS	N/O contact, 2-wire
DO	N/C contact, 3-wire
PS	PNP, N/O contact, 3-wire
NS	NPN, N/O contact, 3-wire
PO	PNP, N/C contact, 3-wire

005	Rated operating voltage
24 V	24 V DC

006	Cable characteristic
C	Standard + energy chain
E	Energy chain + robot

007	Cable length
0,3	0.3 m
2,5	2.5 m
5,0	5.0 m
7,5	7.5 m

008	Cable designation
–	With inscription label holder

009	Electrical connection
OE	Open end
M8D	Cable with plug M8x1, rotatable thread
M12	Cable with plug M12x1, rotatable thread

010	EU certification
–	Without
EX2	II 3GD in accordance with EU Directive 2014/34/EU

Product options

PNS PNP/NPN switchable
PSO PNP, N/C contact, N/O contact switchable

M8 Cable with plug M8x1, snap-on flange

N Without inscription label holder

Versions:
Corrosion-resistant, welding field-resistant, heat-resistant

Ordering – Product options

Configurable product

This product and all its product options can be ordered using the configurator.

The configurator can be found under Products at
➔ **www.festo.com/catalogue/...**

Enter the type or the configuration part number in the search field.

FESTO

Ordering – Basic design

001 Measuring principle	004 Switching output	009 Electrical connection			007 Cable length	Type	Part no.
		Cable	Cable with plug, rotatable thread				
			M8x1	M12x1			
004 N/O contact							
Magnetic reed	Contacting, bipolar	3-wire	–	–	2.5 m	SME-8M-DS-24 V-K-2,5-OE	543862
		3-wire	–	–	5.0 m	SME-8M-DS-24 V-K-5,0-OE	543863
		–	3-pin	–	0.3 m	SME-8M-DS-24 V-K-0,3-M8D	543861
		2-wire	–	–	2.5 m	SME-8M-ZS-24 V-K-2,5-OE	543872
004 N/C contact							
Magnetic reed	Contacting, bipolar	3-wire	–	–	7.5 m	SME-8M-DO-24 V-K-7,5-OE	546799
004 N/O contact							
Magneto-resistive	PNP	–	3-pin	–	0.3 m	SMT-8M-A-PS-24 V-E-0.3-M8D	574334
		3-wire	–	–	2.5 m	SMT-8M-A-PS-24 V-E-2.5-OE	574335
		3-wire	–	–	5.0 m	SMT-8M-A-PS-24 V-E-5.0-OE	574336
		–	–	3-pin	0.3 m	SMT-8M-A-PS-24 V-E-0.3-M12	574337
	NPN	3-wire	–	–	2.5 m	SMT-8M-A-NS-24 V-E-2.5-OE	574338
		–	3-pin	–	0.3 m	SMT-8M-A-NS-24 V-E-0.3-M8D	574339
	Non-contacting	2-wire	–	–	5.0 m	SMT-8M-A-ZS-24 V-E-5,0-OE-Ex2	574341
004 N/C contact							
Magneto-resistive	PNP	3-wire	–	–	7.5 m	SMT-8M-A-PO-24 V-E-7.5-OE	574340

Accessories

Mounting kit SMBR

For dia.	Type	Part no.
12	SMBR-8-12	175093
16	SMBR-8-16	175094
20	SMBR-8-20	175095
25	SMBR-8-25	175096

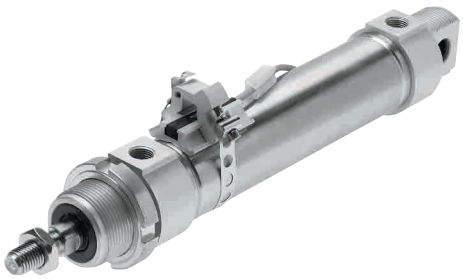

Proximity sensors SME/SMT-10M, for C-slot

FESTO

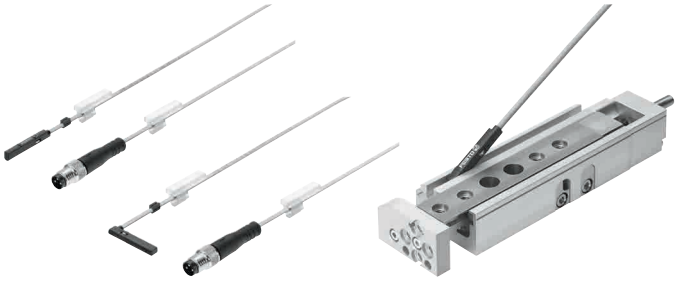

- Switching output PNP, NPN or non-contacting, 2-wire
- Insertable in the slot from above, does not protrude over the cylinder profile
- Suitable for use with energy chains and robots
- Cable clip and inscription labels included in the scope of delivery
- With switching status indication

Order code

001		002		003		004		005		006		007		008		009
	–	10M	–		–	24 V	–	E	–		–	L	–		–	

Legend: Mandatory entry; Optional entry

001	Type
SME	Proximity sensor, magnetic reed
SMT	Proximity sensor, magneto-resistive

002	Design
10M	For C-slot, insertable in the slot from above

003	Switching output, switching element function
ZS	N/O contact, 2-wire
NS	NPN, N/O contact, 3-wire

004	Rated operating voltage
24 V	24 V DC

005	Cable characteristic
E	Energy chain + robot

006	Cable length
0,3	0.3 m
2,5	2.5 m

007	Connection direction
L	In-line

008	Cable designation
–	With inscription label holder

009	Connection technology
OE	Open end
M8D	Cable with plug M8x1, rotatable thread

Product options

PS NPN, N/O contact, 3-wire
DS N/O contact, 3-wire

Q Lateral cable outlet
N Without inscription label holder

M8 Cable with plug M8x1, snap-on flange
M12 Cable with plug M12x1, rotatable thread

Cable length 0.2 … 10 m

Ordering – Product options

Configurable product

This product and all its product options can be ordered using the configurator.

The configurator can be found under Products at
➔ **www.festo.com/catalogue/...**

Enter the type or the configuration part number in the search field.

FESTO

Ordering – Basic design

003 Switching output	007 Cable outlet	Electrical connection		006 Cable length	Type	Part no.
		Cable	Cable with plug, rotatable thread			
003 N/O contact						
NPN	In-line	3-wire	–	2.5 m	SMT-10M-NS-24 V-E-2,5-L-OE	551377
	In-line	–	M8x1, 3-pin	0.3 m	SMT-10M-NS-24 V-E-0,3-L-M8D	551379
Contactless, 2-wire	In-line	2-wire	–	2.5 m	SMT-10M-ZS-24 V-E-2,5-L-OE	551382
Contacting, bipolar	In-line	2-wire	–	2.5 m	SME-10M-ZS-24 V-E-2,5-L-OE	551369

Accessories

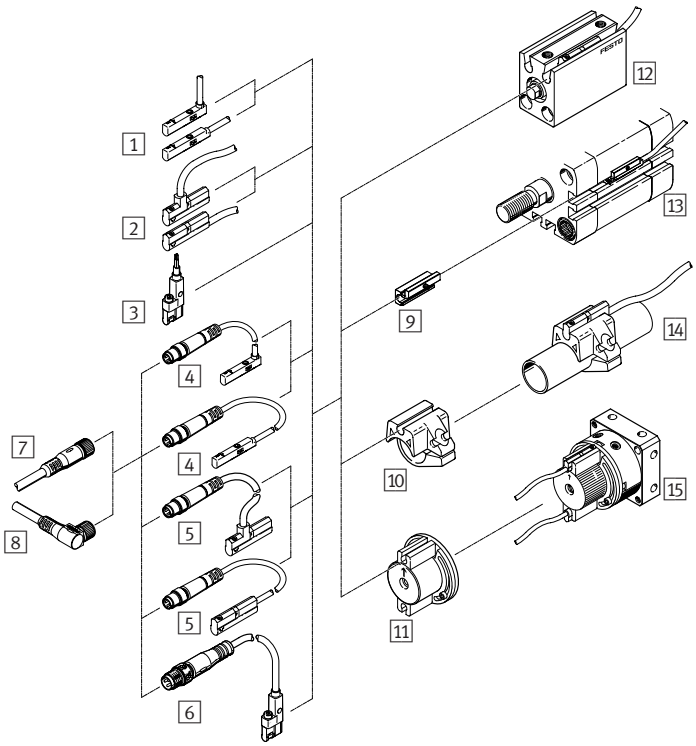

Proximity sensors
1 SMT/SME-10M-...-OE, with cable ➔ 168
2 SME-10, with cable ➔ sme-10
3 SMT-10G-...-OE, with cable ➔ smt-10g
4 SMT/SME-10M-...-M8D, with cable and plug ➔ 168
5 SME-10, with cable and plug ➔ sme-10
6 SMT-10G-...-M..., with cable and plug ➔ smt-10g

Connecting cables
7 NEBU-M...G... ➔ 229
8 NEBU-M...W... ➔ 229

Mounting kits
9 SMBN-10 ➔ smbn
10 SMBR-10-... ➔ smbr
11 WSM-...-SME-10 ➔ wsm

Drives
12 Drives with C-slot ADVC ➔ 32
13 Drives with T-slot DSBC ➔ 21
14 Round cylinders DSNU ➔ 28
15 Swivel modules DSM ➔ dsm

Proximity sensors SIEN, inductive

FESTO

- With standards-based switching distance
- Round design, metric thread, for T-slot
- Flush installation
- With switching status indication
- Design with metal housing

Order code

001	002	003	004	005	006	007	008	009
SIE	N	–		B	N	S		L

Legend: Mandatory entry; Optional entry

001	Type
SIE	Proximity sensor, inductive

002	Design
N	With standards-based switching distance

003	Design
–	Round

004	Size
M5	Metric thread M5
M8	Metric thread M8

005	Type of mounting
B	Flush

006	Electrical output
N	Switching output NPN

007	Switching element function
S	N/O

008	Electrical connection
C	Cable, 2.5 m, 3-wire
S	Plug, M8x1, 3-pin

009	Display
L	Switching status

Product options

Design
- A With analogue output
- D For DC and AC voltage
- F With reduction factor 1 for all metals, welding field-resistant
- H With increased switching distance
- S Special design

Design
- M Metric thread
- Q Block-shaped
- V3 Block-shaped

Size
∅ 4 mm, 6.5 mm; M12, M18x1, M30x1.5

Type of mounting
- NB Non-flush
- S Partially flush

Electrical output
- P Switching output PNP
- Z 2-wire output
- PU Analogue output 0 … 10 V
- UI Analogue output 0 … 10 V and 4 … 20 mA

Switching element function
- O N/C contact
- A Antivalent

Electrical connection
- S Plug
- X Screw terminals

Display
- – Without display
- 2 L Switching status and ready status

Version
- CR Stainless steel housing
- PA Polyamide housing
- WA Housing resistant to welding spatter

Ordering – Product options

Configurable product

This product and all its product options can be ordered using the configurator.

The configurator can be found under Products at
➔ **www.festo.com/catalogue/...**

Enter the type or the configuration part number in the search field.

FESTO

Ordering – Basic design

006 Electrical output	004 Size	008 Electrical connection		Cable length	Type	Part no.
		Cable	Plug			
007 N/O contact						
NPN	Metric thread M5	3-wire	–	2.5 m	SIEN-M5B-NS-K-L	150368
	Metric thread M8	3-wire	–	2.5 m	SIEN-M8B-NS-K-L	150384
	Metric thread M5	–	Plug, M8x1, 3-pin	–	SIEN-M5B-NS-S-L	150369
	Metric thread M8	–	Plug, M8x1, 3-pin	–	SIEN-M8B-NS-S-L	150385

Accessories

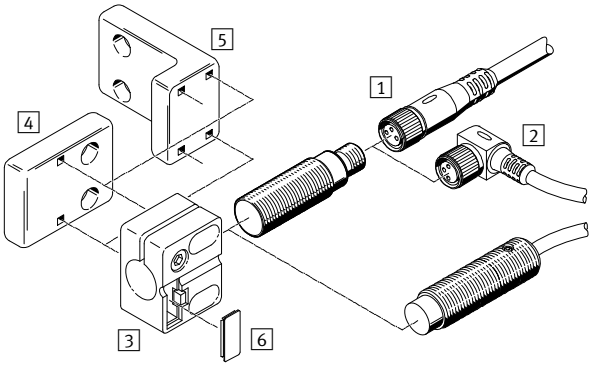

Connecting cables
1 NEBU-M...G... ➔ 229
2 NEBU-M...W... ➔ 229
Sensor brackets
3 SIEZ-...B ➔ sien
4 SIEZ-UV ➔ sien
5 SIEZ-UH ➔ sien

6 Inscription label-LB ➔ sien

Position sensors SRBS

FESTO

- Switching output 2x PNP or NPN (programmable)
- Sensing range 0 ... 270°
- Cable length 0.3 m
- Electrical connection, 4-pin, M8x1 plug
- Design for semi-rotary drives DRVS

Order code

001		002		003		004	005		006		007		008		009
SRBS	–	Q12	–		–	E	270	–	EP	–	1	–	S	–	M8

Legend: Mandatory entry; Optional entry

001	Type
SRBS	Position sensor

002	Designation
Q12	Version Q12 for semi-rotary drive DRVS

003	Size
...	6, 8, 10, 12, 16, 25, 32, 40

004	Display type
E	LED

005	Measuring range
270	0 ... 270°

006	Sensor principle
EP	Non-contacting, programmable switching function

007	Nominal operating voltage
1	24 V DC

008	Electrical output
S	PNP or NPN

009	Electrical connection
M8	M8 plug

Product options

Q1 Version for swivel module DSM

Ordering – Product options

Configurable product

This product and all its product options can be ordered using the configurator.

The configurator can be found under Products at
→ **www.festo.com/catalogue/...**

Enter the type or the configuration part number in the search field.

Ordering

002 Designation For semi-rotary drives	Type	Part no.
DRVS-6	SRBS-Q12-6-E270-EP-1-S-M8	2619969
DRVS-8	SRBS-Q12-8-E270-EP-1-S-M8	2619972
DRVS-12	SRBS-Q12-12-E270-EP-1-S-M8	2393546
DRVS-16	SRBS-Q12-16-E270-EP-1-S-M8	2393547
DRVS-25	SRBS-Q12-25-E270-EP-1-S-M8	2393548
DRVS-32	SRBS-Q12-32-E270-EP-1-S-M8	2393549
DRVS-40	SRBS-Q12-40-E270-EP-1-S-M8	2393550

Pressure sensors SPAE

FESTO

SPAE-P10R

SPAE-V1R

- Pressure sensor
- Vacuum sensor
- Pressure measuring range 0 ... 10 bar, 0 ... –1 bar
- Voltage 18 ... 30 V DC
- Switching output PNP/NPN, switchable
- N/C or N/O contact, switchable
- IO-Link® communication interface

Order code

001		002	003	004		005		006
SPAE	–		R		–	PNLK	–	2.5 K

Legend: Mandatory entry Optional entry

001	Type
SPAE	Pressure sensor

002	Pressure measuring range
P10	0 ... 10 bar
V1	0 ... –1 bar

003	Supply port
R	Relative pressure

004	Pneumatic connection
S4	Push-in sleeve 4 mm
S6	Push-in sleeve 6 mm
Q3	Push-in connector 3 mm
Q4	Push-in connector 4 mm
F	Flange

005	Electrical output
PNLK	Switching output PNP/NPN/IO-Link®

006	Electrical connection
2.5 K	Connecting cable 2.5 m, open end

Ordering

004 Pneumatic connection	Type	Part no.
002 Pressure measuring range 0 ... –1 bar		
Push-in sleeve 4 mm	SPAE-V1R-S4-PNLK-2.5 K	8001440
Push-in sleeve 6 mm	SPAE-V1R-S6-PNLK-2.5 K	8001441
Push-in connector 3 mm	SPAE-V1R-Q3-PNLK-2.5 K	8001442
Push-in connector 4 mm	SPAE-V1R-Q4-PNLK-2.5 K	8001443
Flange	SPAE-V1R-F-PNLK-2.5 K	8001444

004 Pneumatic connection	Type	Part no.
002 Pressure measuring range 0 ... 10 bar		
Push-in sleeve 4 mm	SPAE-P10R-S4-PNLK-2.5 K	8001445
Push-in sleeve 6 mm	SPAE-P10R-S6-PNLK-2.5 K	8001446
Push-in connector 3 mm	SPAE-P10R-Q3-PNLK-2.5 K	8001447
Push-in connector 4 mm	SPAE-P10R-Q4-PNLK-2.5 K	8001448
Flange	SPAE-P10R-F-PNLK-2.5 K	8001449

Accessories

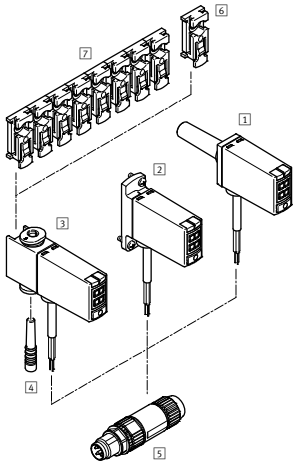

Pressure sensor
1 SPAE-...-S...
2 SPAE-...-F...
3 SPAE-...-Q...

4 Blanking plug, with SPAE-...-Q... (included in scope of delivery)
5 Stecker NECU-S-M...G3-HX → spae
6 Mounting clip SAMH-PE-MC-1 → spae
7 Mounting clip SAMH-PE-MC-8 → spae

Pressure sensors SDE5

FESTO

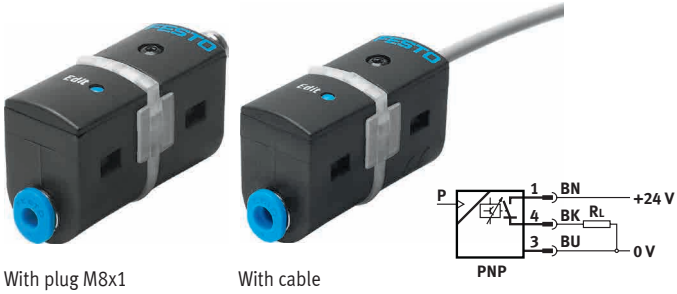

With plug M8x1 With cable

- Programmable and configurable pressure switch for simple pressure sensing tasks
- Relative pressure measurement
- Teach-in function for programming
- Integrated microprocessor
- Switching status indicated by an LED visible from all sides

Order code

001	002	003	004	005	006
SDE5 –	[ ] –	[ ] –	[ ] –	P –	[ ]

Legend: [ ] Mandatory entry

001	Type
SDE5	Pressure sensor

002	Pressure measuring range
D2	0 … 2 bar
D10	0 … 10 bar
V1	–1 … 0 bar

003	Output function
FP	Freely programmable, selectable N/O, N/C contact
O	Threshold value with fixed hysteresis, 1 teach-in pressure, N/O contact
C	Threshold value with fixed hysteresis, 1 teach-in pressure, N/C contact
O1	Threshold value with fixed hysteresis, 2 teach-in pressures, N/O contact
O2	Threshold value with variable hysteresis, 2 teach-in pressures, N/O contact
O3	Window comparator with fixed hysteresis, 2 teach-in pressures, N/O contact
C3	Window comparator with fixed hysteresis, 2 teach-in pressures, N/C contact

004	Pneumatic connection
Q4	Push-in connector at both ends, Q4 for tubing O. D. 4 mm
Q6	Push-in connector at both ends, for tubing O. D. 6 mm
Q4E	Push-in connector at one end, for tubing O. D. 4 mm
Q6E	Push-in connector at one end, for tubing O. D. 6 mm

005	Electrical output
P	1 switching output PNP

006	Electrical connection
C	Cable, 2.5 m long, 3-wire
M8	Plug M8x1, 3-pin

Product options

Pressure measuring range
D6 0 … 6 bar
D10 0 … 10 bar

Output function
O1 NF No binary switching function (analogue output)

Pneumatic connection
T532 Push-in connector 5/32"
T14 Push-in connector ¼"

Electrical accessories
– Connecting cables
– X teach-in point permanently set
– X teach-in point negative
– Y teach-in point permanently set
– Y teach-in point negative

Ordering – Product options

Configurable product

This product and all its product options can be ordered using the configurator.

The configurator can be found under Products at
➔ **www.festo.com/catalogue/...**

Enter the type or the configuration part number in the search field.

FESTO

Ordering – Basic design

003 **Output function**	002 **Pressure measuring range**					
	V1: –1 … 0 bar		D2: 0 … 2 bar		D10: 0 … 10 bar	
	Type	Part no.	Type	Part no.	Type	Part no.
FP					SDE5-D10-FP-Q6E-P-M8	542897
	SDE5-V1-FP-Q6-P-M8	542887			SDE5-D10-FP-Q6-P-M8	542898
					SDE5-D10-FP-Q4E-P-K	542901
					SDE5-D10-FP-Q4E-P-M8	542900
					SDE5-D10-FP-Q6-P-K	542899
O	SDE5-V1-O-Q6E-P-M8	527461			SDE5-D10-O-Q6E-P-M8	527467
			SDE5-D2-O-Q6E-P-K	542888	SDE5-D10-O-Q6E-P-K	542890
	SDE5-V1-O-Q6-P-M8	527458			SDE5-D10-O-Q6-P-M8	527464
	SDE5-V1-O-Q4E-P-M8	527460			SDE5-D10-O-Q4E-P-M8	527466
	SDE5-V1-O-Q4-P-M8	527457			SDE5-D10-O-Q4-P-M8	527463
C					SDE5-D10-C-Q6E-P-M8	542894
					SDE5-D10-C-Q4E-P-M8	542889
					SDE5-D10-C-Q6E-P-K	542895
O1	SDE5-V1-O1-Q6-P-M8	542886				
O2					SDE5-D10-O2-Q6-P-M8	542892
					SDE5-D10-O2-Q6E-P-M8	542891
O3					SDE5-D10-O3-Q6E-P-K	542893
C3					SDE5-D10-C3-Q6E-P-K	542896

Accessories

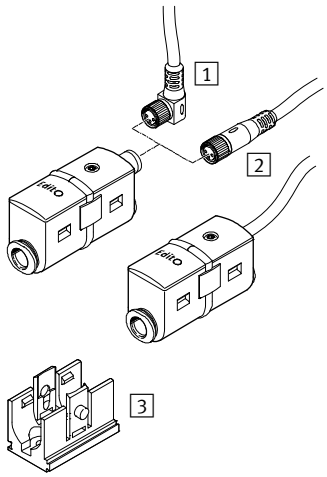

1 Connecting cable NEBU-M8W3, angled socket ➔ 175
2 Connecting cable NEBU-M8G3, straight socket ➔ 175
3 Wall bracket (included in scope of delivery)

1 **Connecting cables NEBU-M8W3, M8x1, angled socket**		
Description	Type	Part no.
Cable length 2.5 m	NEBU- 8W3-K-2.5-LE3	541338
Cable length 5 m	NEBU-M8W3-K-5-LE3	541341

2 **Connecting cables NEBU-M8G3, M8x1, straight socket**		
Description	Type	Part no.
Cable length 2.5 m	NEBU-M8G3-K-2.5-LE3	541333
Cable length 5 m	NEBU-M8G3-K-5-LE3	541334

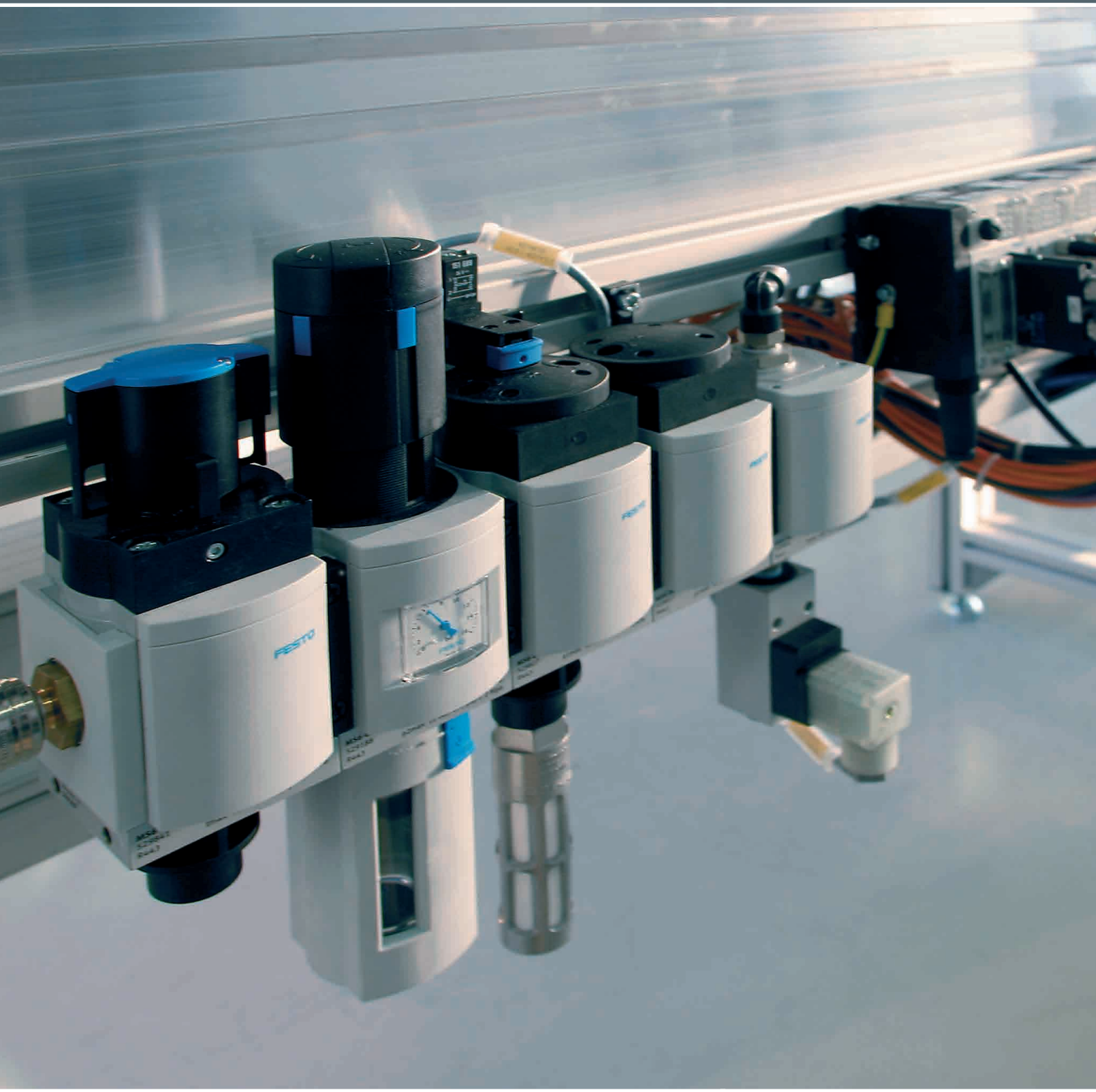

Compressed air preparation

10

Highlights

MSB

Service unit combinations, MS series

+ Combinations of filter regulator, filter, lubricator, on-off valve and soft-start valve
+ Sizes: 4, 6

Page 185

MS-LR

Pressure regulators, MS series

+ Sizes 4, 6, 9, 12
+ Flow rate 1000 ... 22000 l/min
+ Pressure gauge with bar, psi, MPa

Page 189

MS-EE

On-off valves, solenoid actuated, MS series

+ Sizes 4, 6, 9, 12
+ Flow rate 1000 ... 32000 l/min
+ 24 V DC, 110, 230 V AC
+ Elektrisch betätigtes
+ 3/2-way valve, normally closed

Page 191

MS-FRM

Branching modules, MS series

+ Sizes 4, 6, 9, 12
+ Flow rate 1200 ... 42000 l/min

Page 195

Contents

Product overview 179
Service unit combinations MSB4/MSB6-FRC, MS series 183
Service unit combinations MSB4/MSB6, MS series. 185
Filter regulators MS4/MS6/MS12-LFR, MS series 187
Pressure regulators MS4/MS6/MS12-LR, MS series 189
On-off valves MS4/MS6-EM1, MS4/MS6-EE, MS series 191
Soft-start/quick exhaust valves MS4/MS6-DL, MS6-SV, MS series 193
Branching modules MS4/MS6-FRM, MS series 195
Distributor blocks MS4/MS6-FRM-FRZ, MS series 197
Connecting plates MS4/MS6-AG... 198

FESTO

Software tool

Air consumption	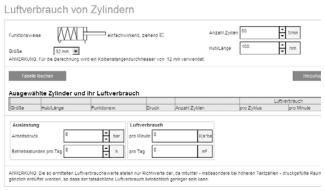	Calculate your system's air consumption quickly and conveniently. Simply enter all the drives and tubing, set the cycle times and working pressure and the air consumption per minute and per day will be calculated for you. It includes a feature for exporting the input table together with the result directly to Excel.	This tool can be found • on our website at www.festo.com/catalogue by clicking on the blue button "Engineering"
Configurator	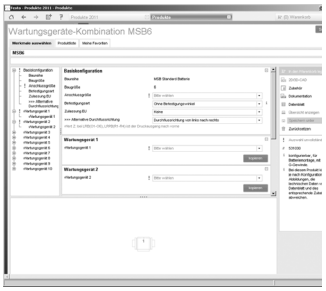	Design a product with numerous features reliably and quickly with the help of the configurator. Select all the required product features step by step. The use of logic checks ensures that only correct configurations are available for selection. A dynamic graphic generated on the basis of the configuration provides visual assistance in selecting the correct product features.	The configurator is part of the electronic catalogue and is not available as a separate software program.

Service unit combinations: MS series

	 Service unit combinations MSB4, MSB6	 **Service unit combinations MSB4-FRC, MSB6-FRC**	 **Service unit combinations MSE6-E2M**
Pneumatic connection 1	G1/4, G1/2	G1/8, G1/4, G3/8, G1/2	G1/2
Standard nominal flow rate	750 ... 5100 l/min	850 ... 4800 l/min	4500 l/min
Pressure regulation range	0.5 ... 12 bar	0.3 ... 12 bar	
Flow measuring range			50 ... 5000 l/min
Operating pressure	0.8 ... 18 bar	0.8 ... 20 bar	4 ... 10 bar
Grade of filtration	5 ... 40 µm	5 ... 40 µm	
Description	• Combination of filter regulator MS-LFR, lubricator MS-LOE, on-off valve MS-EM, MS-EE, soft-start valve MS-DL, branching module MS-FRM • Sizes: 4, 6	• Filter, regulator and lubricator functions in a single unit • High flow rate and highly efficient in removing contaminants • Good regulation characteristics with minimal pressure hysteresis • Sizes: 4, 6	• Intelligent pneumatic service unit for optimising the use of compressed air as energy medium • Function: energy saving (2/2-way function DE, V24) • Equipped with measurement, control and diagnostic functions • Identification of production downtime and leakages • Used as process monitoring module • Electrical control via bus node • Size: 6
➔ Page/online	**183**	**185**	**mse6**

10

FESTO

Filter regulators: MS series

	 Filter regulators **MS4-LFR, MS6-LFR, MS9-LFR, MS12-LFR**
Pneumatic connection 1	G1/8, G1/4, G3/8, G1/2
Standard nominal flow rate	850 … 24000 l/min
Pressure regulation range	0.3 … 16 bar
Operating pressure	0.8 … 20 bar
Grade of filtration	5 … 40 µm
Description	• MS4-LFR, MS6-LFR: directly actuated diaphragm regulator, MS9-LFR: piloted or directly actuated filter-diaphragm regulator, MS12-LFR: piloted diaphragm regulator without internal air consumption • Good regulation characteristics with primary pressure compensation and minimal hysteresis • Good particle and condensate separation • With or without secondary venting • High flow rate • Lockable rotary knob • Return flow option for exhausting from output 2 to input 1 already integrated • Sizes: 4, 6, 9, 12
➔ **Page/online**	**187**

Regulators: MS series

	 Pressure regulators **MS4-LR, MS6-LR, MS9-LR**	 **Pressure regulators** **MS12-LR**
Pneumatic connection 1	G1/8, G1/4, G3/8, G1/2	Connecting plate
Standard nominal flow rate	1000 … 30000 l/min	12000 … 22000 l/min
Pressure regulation range	0.3 … 16 bar	0.15 … 16 bar
Operating pressure	0.8 … 20 bar	0.8 … 21 bar
Max. pressure hysteresis	0.25 … 0.4 bar	0.04 … 0.4 bar
Description	• High flow rate with minimal pressure drop • Good regulation characteristics with minimal hysteresis and primary pressure compensation • Available with or without secondary venting • Lockable rotary knob • Optional pressure sensor and rotary knob pressure gauge • Sizes: 4, 6, 9	• High flow rate with minimal pressure drop • Good regulation characteristics with minimal hysteresis and primary pressure compensation • With secondary venting • Lockable rotary knob • MS12-LR-…-PO: pneumatically actuated (pressure range determined via pilot control) • MS12-LR-…-PE6: solenoid actuated (pilot control via proportional pressure regulator) • Size: 12
➔ **Page/online**	**189**	**ms12-lr**

FESTO

On-off and soft-start valves: MS series

	On-off valves **MS4-EM1, MS6-EM1, MS9-EM, MS12-EM**	**On-off valves** **MS4-EE, MS6-EE, MS9-EE, MS12-EE**	**Soft-start valves** **MS4-DL, MS6-DL, MS12-DL**
Pneumatic connection 1	Manifold module, G1/8, G1/4, G3/8, G1/2	Manifold module, G1/8, G1/4, G3/8, G1/2	Manifold module, G1/8, G1/4, G3/8, G1/2
Standard nominal flow rate	1200 … 32000 l/min	1000 … 32000 l/min	1000 … 42000 l/min
Operating pressure	0 … 20 bar	3 … 18 bar	2 … 20 bar
Actuation type	Manual	Electrical	Pneumatic
Description	• Manual 3/2-way valve for pressurising and exhausting pneumatic systems • A silencer can be attached or the exhaust air can be ducted at port 3 • Switching position is immediately recognisable • Optionally with pressure gauge and pressure sensor • Sizes: 4, 6, 9, 12	• Electrical 3/2-way valve for pressurising and exhausting pneumatic systems • A silencer can be attached or the exhaust air can be ducted at port 3 • Supply voltage 24 V DC, 110, 230 V AC • Optionally with pressure gauge and pressure sensor • With solenoid coil, without plug socket • Sizes: 4, 6, 9, 12	• 2/2-way valve for slowly pressurising pneumatic systems (for use with on-off valves EM1 and EE) • For building up pressure gradually • Adjustable pressure build-up time • Sizes: 4, 6, 12
➔ **Page/online**	**191**	**191**	**193**

On-off and soft-start valves: MS series

	Soft-start/quick exhaust valves **MS6-SV-E, MS6-SV-D**	**Soft-start/quick exhaust valves** **MS6-SV-C**
Pneumatic connection 1	G1/2	G1/2
Standard nominal flow rate	4300 l/min	4300 … 5700 l/min
Operating pressure	3,5 … 10 bar	3 … 10 bar
Actuation type	Electrical	Electrical
Description	• Reliable 2-channel exhausting with self-monitoring up to Performance • Level e and category 4 to EN ISO 13849-1 • SIL 3 • For reducing pressure quickly and reliably and for building up pressure gradually • Adjustable pressure build-up time • Available with silencer • Supply voltage 24 V DC • Size: 6	• Suitable for applications with high flow rates and restricted space with medium safety requirements up to controller category 1, Performance Level c • For the gradual pressurisation and quick exhausting of system components (single channel) • Adjustable pressure switchover point • Optionally with silencer • Supply voltage 24 V DC • Size: 6
➔ **Page/online**	**ms6-sv**	**193**

FESTO

Compressed air distributors: MS series

	Branching modules **MS4-FRM, MS6-FRM, MS9-FRM, MS12-FRM**	**Distributor blocks** **MS4-FRM-FRZ, MS6-FRM-FRZ**
Pneumatic connection 1	Connecting plate, G1/8, G1/4, G3/8, G1/2, G3/4, G1	G1/4, G1/2
Standard nominal flow rate in main flow direction 1->2	1200 … 50000 l/min	4050 … 14600 l/min
Operating pressure	0 … 20 bar	0 … 20 bar
Description	• Optionally with integrated non-return function and pressure switch • Outlet at top and bottom • Can be used as an intermediate distributor for varying air qualities • Optionally with pressure sensor • Sizes: 4, 6, 9, 12	• Slim pneumatic distributor • Outlet at top and bottom • Can be used as an intermediate distributor for varying air qualities • Can be used as an adapter between two pressure regulators with large rotary knob with pressure gauge on size MS4 • Sizes: 4, 6
➔ **Page/online**	**195**	**197**

Accessories: MS series

	Connecting plates **MS4-AG..., MS6-AG...**
Pneumatic connection 1	G1/4, G3/8, G1/2, G3/4
Pneumatic connection 2	G1/4, G3/8, G1/2, G3/4
Description	• Accessories for size MS4, MS6 • Adapter for pneumatic connection
➔ **Page/online**	**198**

Customised components – for your specific requirements

Components for compressed air preparation with customised designs
Can't find the compressed air preparation components you need in our catalogue?
We can offer you customised components that are tailored to your specific requirements.

Common product modifications:
- Modified pressure range
- Rotary knob: in a special colour, with protection against rotation
- Fitting: integrated throttling port, special thread
- Tubing with special printing
- Pressure gauge with red-green range

Many additional variants are possible. Ask your Festo sales engineer, who will be happy to help.
➔ **www.festo.com/contact**

Service unit combinations MSB4/MSB6-FRC, MS series

FESTO

- Filter, regulator and lubricator functions in a single unit
- High flow rate and highly efficient in removing contaminants
- Good control characteristics with minimal pressure hysteresis
- Set values are secured by locking the rotary knob
- Flow rate 850 … 4800 l/min
- Operating pressure 1.5 … 20 bar
- Grade of filtration 40 µm
- Manual rotary condensate drain

Order code – Basic design

001	002		003		004	005	006
MSB		–		–	FRC5:J1	M1	–

Legend: Mandatory entry; Optional entry

001	Type
MSB	Service unit combination

002	Size
4	Grid dimension: 40 mm
6	Grid dimension: 62 mm

003	Pneumatic connection
1/4	Thread G¼
1/2	Thread G½

004	Service unit combination
FRC5:J1	– Filter regulator with pressure gauge, rotary knob with detent, can be locked using accessories, plastic bowl with plastic bowl guard – Lubricator – Pressure regulation range 0.5 … 12 bar – Plastic bowl with plastic bowl guard – Grade of filtration 40 µm – Manual rotary condensate drain – Pressure gauge with outer scale in bar and inner scale in psi

005	Lubricator
M1	Plastic bowl with plastic bowl guard

006	Direction of flow
–	From left to right

Product options

- Additional connection sizes
- Grade of filtration 5 µm
- Pressure regulation range 0.1 … 12 bar
- Metal bowl guard for filter regulator and for lubricator
- Fully automatic condensate drain

Ordering – Product options

Configurable product

This product and all its product options can be ordered using the configurator.

The configurator can be found under Products at
➔ **www.festo.com/catalogue/...**

Enter the type or the configuration part number in the search field.

Ordering – Basic design

002 Size	003 Pneumatic connection	Standard nominal flow rate	Pressure regulation range	Grade of filtration	Type	Part no.
Grade of filtration 40 µm, manual rotary condensate drain						
4	G¼	900 l/min	0.5 … 12 bar	40 µm	MSB4-1/4-FRC5:J1M1	531117
6	G½	3700 l/min	0.5 … 12 bar	40 µm	MSB6-1/2-FRC5:J1M1	530244

Service unit combinations MSB4/MSB6-FRC, MS series

FESTO

Accessories

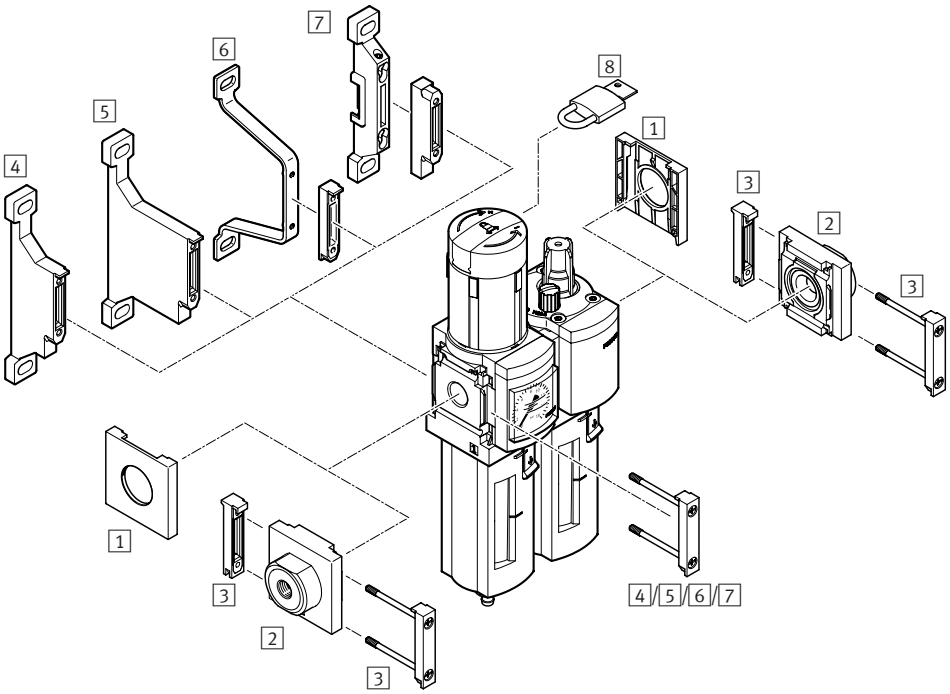

1 Cover cap MS4/6-END ➔ ms4-end
2 Connecting plate set MS4/6-AG... ➔ 198
3 Module connector MS4/6-MV ➔ 184
4 Mounting bracket MS4/6-WP ➔ 184
5 Mounting bracket MS4/6-WPB ➔ 184
6 Mounting bracket MS4/6-WPE ➔ ms4-wpe
7 Mounting bracket MS4/6-WPM ➔ 184
8 Padlock LRVS-D ➔ lrvs

3 Module connector MS4/6-MV

Size	Type	Part no.
MS4	MS4-MV	532798
MS6	MS6-MV	532799

4 Mounting bracket MS4/6-WP

Size	Type	Part no.
For wall mounting		
MS4	MS4-WP	532184
MS6	MS6-WP	532195

5 Mounting bracket MS4/6-WPB

Size	Type	Part no.
For wall mounting		
MS4	MS4-WPB	526063
MS6	MS6-WPB	526074

7 Mounting bracket MS4/6-WPM

Size	Type	Part no.
For wall mounting		
MS4	MS4-WPM-D	526060
MS6	MS6-WPM-D	526073

Service unit combinations MSB4/MSB6, MS series

FESTO

①

②

③

- For filtered and unlubricated compressed air
- Supply pressure can be opened and closed
- Output pressure is infinitely adjustable within the pressure regulation range
- Flow rate 14000 … 4400 l/min
- Operating pressure 0.8 … 18 bar
- Grade of filtration 40 µm
- Manual rotary condensate drain

Combinations comprising:

① Manually operated on-off valve, filter regulator with lockable pressure gauge, mounting bracket

② Manually operated on-off valve, filter regulator with lockable pressure gauge, branching module with pressure switch, mounting bracket

③ On-off valve, filter regulator, solenoid actuated on-off valve with pressure sensor for operational status indicator, mounting bracket

Order code – Basic design

001	002	003	004	005				006
MSB		–	–	–	C3 :	J1 :	–	WP

Legend: Mandatory entry; Optional entry

001	Type
MSB	Service unit combination

002	Size
4	Grid dimension: 40 mm
6	Grid dimension: 62 mm

003	Pneumatic connection
1/4	Thread G¼
1/2	Thread G½

004	Direction of flow
–	From left to right

005	Service unit combination
C3	On-off valve MS4-EM1, MS6-EM1
J1	Filter regulator MS4-LFR-D7-ERM-AS, MS6-LFR-D7-ERM-AS
D14	On-off valve MS4-EE-10V24P-AD7, MS6-EE-10V24P-AD7
F12	Branching module MS4-FRM-AD7, MS6-FRM-AD7

006	Type of mounting
WP	Mounting bracket

Product options

- Additional connection sizes
- Connecting plates
- Grade of filtration 5 µm
- Service unit equipment: filter regulators, soft-start valves, lubricators, on-off valves
- Alternative direction of flow
- Fully automatic condensate drain

Ordering – Product options

Configurable product

This product and all its product options can be ordered using the configurator.

The configurator can be found under Products at
→ **www.festo.com/catalogue/...**

Enter the type or the configuration part number in the search field.

Configuration part no.						
002 **Size**	003 **Pneumatic connection**	**Standard nominal flow rate**	**Pressure regulation range**	**Grade of filtration**	Type	Part no.
MSB4	G¼	800 … 1400 l/min	1 … 12 bar	0.01 … 40 µm	MSB4	531029
MSB6	G½	1700 … 4800 l/min	1 … 12 bar	0.01 … 40 µm	MSB6	531030

FESTO

Ordering – Basic design

002 Size	003 Pneumatic connection	Condensate drain	Grade of filtration	Type	Part no.
① Manually operated on-off valve, filter regulator with lockable pressure gauge, mounting bracket Pressure regulation range 0.5 ... 12 bar, pressure gauge with outer scale in bar and inner scale in psi					
MSB4	G¼	Manual rotary	40 µm	MSB4-1/4:C3:J1-WP	8025354
MSB6	G½	Manual rotary	40 µm	MSB6-1/2:C3:J1-WP	8025355
② Manually operated on-off valve, filter regulator with lockable pressure gauge, branching module with pressure sensor, mounting bracket Pressure regulation range 0.5 ... 10 bar, pressure gauge with outer scale in bar and inner scale in psi					
MSB4	G¼	Manual rotary	40 µm	MSB4-¼:C3J1F12-WP	8025356
MSB6	G½	Manual rotary	40 µm	MSB6-½:C3J1F12-WP	8025357
③ Manually operated on-off valve, filter regulator with lockable pressure gauge, solenoid actuated on-off valve, with pressure sensor, mounting bracket Pressure regulation range 0.5 ... 10 bar, pressure gauge with outer scale in bar and inner scale in psi					
MSB4	G¼	Manual rotary	40 µm	MSB4-¼:C3J1D14-WP	8025358
MSB6	G½	Manual rotary	40 µm	MSB6-½:C3J1D14-WP	8025359

Accessories

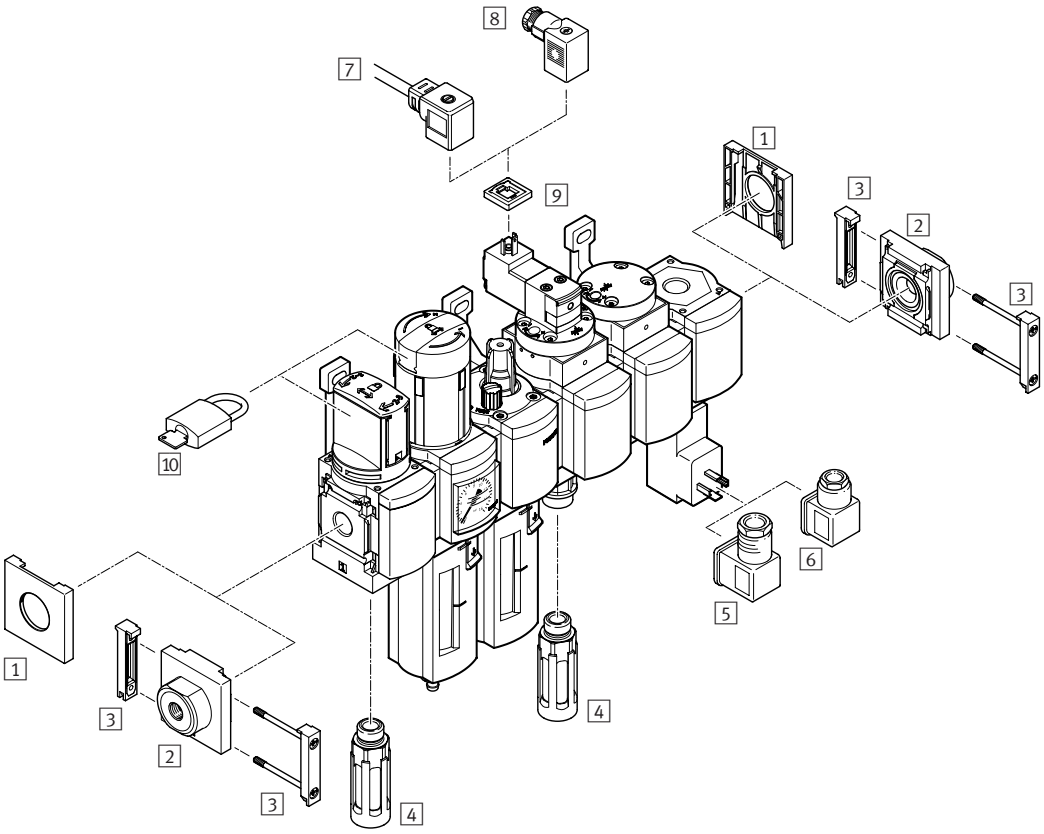

1 Cover cap MS4/6-END ➔ ms4-end
2 Connecting plate-SET MS4/6-AG... ➔ 198
3 Module connector MS4/6-MV ➔ 186
4 Silencer U ➔ 241
5 Angled socket PEV-1/4-WD-LED ➔ pev
6 Plug socket MSSD-C-4P ➔ mssd-c
7 Plug socket with cable KMEB ➔ kmeb
8 Plug socket MSSD-EB ➔ mssd-eb
9 Illuminating seal MEB-LD ➔ meb-ld
10 Padlock LRVS-D ➔ lrvs

Mounting bracket MS4/MS6-WP, MS4/MS6-WPB, MS4/MS6-WPM ➔ 186

3 Module connector MS4/6-MV

Size	Type	Part no.
MS4	MS4-MV	532798
MS6	MS6-MV	532799

Mounting bracket MS4/6-WP

Size	Type	Part no.
For wall mounting		
MS4	MS4-WP	532184
MS6	MS6-WP	532195

Mounting bracket MS4/6-WPB

Size	Type	Part no.
For wall mounting		
MS4	MS4-WPB	526063
MS6	MS6-WPB	526074

Mounting bracket MS4/6-WPM

Size	Type	Part no.
For wall mounting		
MS4	MS4-WPM-D	526060
MS6	MS6-WPM-D	526073

Filter regulators MS4/MS6/MS12-LFR, MS series

FESTO

- Filter and pressure regulator in a single unit
- Good regulation characteristics with minimal hysteresis and primary pressure compensation
- Good particle and condensate separation
- Flow rate 850 … 7200 l/min
- Operating pressure 0.8 … 20 bar
- Grade of filtration 5 µm, 40 µm
- Manual rotary condensate drain, fully automatic

Order code – Basic design

001	002	003	004	005	006	007	008	009	010
MS		LFR						AS	

Mandatory entry Optional entry

001	Type
MS	Standard service unit

002	Size
4	Grid dimension: 40 mm
6	Grid dimension: 62 mm
12	Grid dimension: 124 mm

003	Service function
LFR	Filter regulator

004	Pneumatic connection
1/4	Female thread G¼
1/2	Female thread G½

005	Pressure regulation range
D6	Pressure regulation range 0.3 … 7 bar
D7	Pressure regulation range 0.5 … 12 bar

006	Grade of filtration
C	5 µm
E	40 µm

007	Bowl guard
R	Plastic bowl guard
U	Integrated as metal bowl guard

008	Condensate drain
M	Manual rotary
V	Fully automatic

009	Security
AS	Rotary knob with detent, can be locked using accessories

010	Direction of flow
–	From left to right

Product options

- Additional connection sizes
- Connecting plates
- Pressure regulation range
- Condensate drain
- Pressure gauge alternatives
- Alternative pressure gauge scale
- Secondary venting
- Rotary knob
- Security
- Type of mounting
- EU certification
- UL certification
- Alternative direction of flow

Ordering – Product options

Configurable product

This product and all its product options can be ordered using the configurator.

The configurator can be found under Products at
➔ **www.festo.com/catalogue/...**

Enter the type or the configuration part number in the search field.

Configuration part no.

002 Size	004 Pneumatic connection	Standard nominal flow rate	Pressure regulation range	Grade of filtration	Type	Part no.
MS4	G¼	900 … 1900 l/min	0.3 … 12 bar	5 … 40 µm	ms4-lfr	526489
MS6	G½	2000 … 7200 l/min	0.3 … 16 bar	5 … 40 µm	ms6-lfr	526490
MS12	Connecting plate	11000 … 17000 l/min	0.3 … 16 bar	5 … 40 µm	ms12-lfr	535022

FESTO

Ordering – Basic design

			006 Grade of filtration 5 µm		006 Grade of filtration 40 µm	
002 Size	004 Pneumatic connection	008 Condensate drain	Type	Part no.	Type	Part no.
Pressure regulation range 0.3 … 7 bar, integrated pressure gauge, display unit [bar], standard rotary knob with detent, can be locked using accessories, plastic bowl guard						
MS4	G¼	Manual rotary	MS4-LFR-¼-D6-CRM-AS	529144	MS4-LFR-¼-D6-CRM-AS	529148
		Fully automatic	MS4-LFR-¼-D6-CRV-AS	529146	MS4-LFR-¼-D6-ERV-AS	529150
MS6	G½	Manual rotary	MS6-LFR-½-D6-CRM-AS	529176	MS6-LFR-½-D6-ERM-AS	529180
		Fully automatic	MS6-LFR-½-D6-CRV-AS	529178	MS6-LFR-½-D6-ERV-AS	529182
Pressure regulation range 0.5 … 12 bar, integrated pressure gauge, display unit [bar], standard rotary knob with detent, can be locked using accessories, plastic bowl guard						
MS4	G¼	Manual rotary	MS4-LFR-¼-D7-CRM-AS	529152	MS4-LFR-¼-D7-ERM-AS	529156
		Fully automatic	MS4-LFR-¼-D7-CRV-AS	529154	MS4-LFR-¼-D7-ERV-AS	529158
MS6	G½	Manual rotary	MS6-LFR-½-D7-CRM-AS	529184	MS6-LFR-½-D7-ERM-AS	529188
		Fully automatic	MS6-LFR-½-D7-CRV-AS	529186	MS6-LFR-½-D7-ERV-AS	529190
Pressure regulation range 0.5 … 12 bar, integrated pressure gauge, display unit [bar], standard rotary knob with detent, can be locked using accessories, integrated as metal bowl guard						
MS4	G¼	Manual rotary			MS4-LFR-¼-D7-EUM-AS	535724
		Fully automatic	MS4-LFR-¼-D7-CUV-AS	535720	MS4-LFR-¼-D7-EUV-AS	535722
MS6	G½	Manual rotary	MS6-LFR-½-D7-CUM-AS	530338	MS6-LFR-½-D7-EUM-AS	529192
		Fully automatic	MS6-LFR-½-D7-CUV-AS	530340	MS6-LFR-½-D7-EUV-AS	529194

Accessories

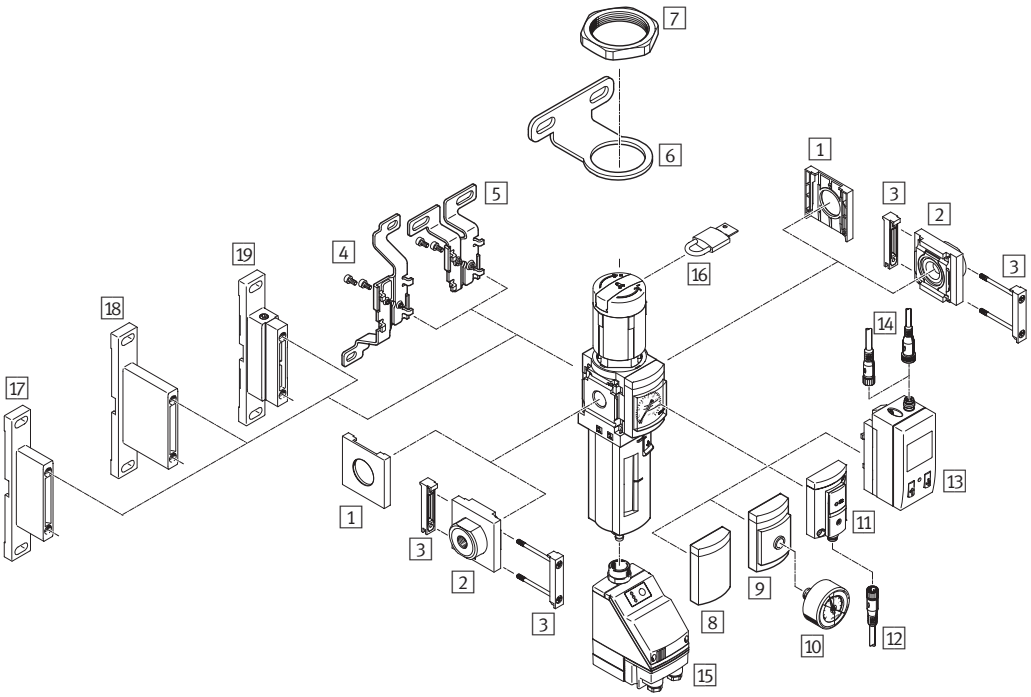

1 Cover cap MS-END ➔ ms4-end
2 Connecting plate set MS4/6-AG… ➔ 198
3 Module connector MS-MV ➔ 188
4 Mounting bracket MS-WB ➔ 188
5 Mounting bracket MS-WBM ➔ ms4-wbm
6 Mounting bracket MS-WR ➔ 188
7 Hex nut MS-WRS ➔ ms4-wrs
8 Cover plate VS ➔ ms4-lfr
9 Adapter for EN pressure gauge ⅛/¼ A8/A4 ➔ ms4-lfr
10 Pressure gaugeMA ➔ ma
11 Pressure sensor without display AD7 … AD4 ➔ msf-lfr
12 Connecting cable NEBU-M8…-LE3 ➔ 229
13 Pressure sensor with display AD1 … AD4 ➔ msf-lfr
14 Connecting cable NEBU-M8…-LE3/ NEBU-M12…-LE4 ➔ 229
15 Fully automatic, electrically actuated condensate drain E2/E3/E4 ➔ ms4-lfr
16 Padlock LRVS-D ➔ lrvs
17 Mounting bracket MS-WP ➔ 188
18 Mounting bracket MS-WPB ➔ 188
19 Mounting bracket MS-WPM ➔ 188

3 Module connector MS-MV

Size	Type	Part no.
MS4	MS4-MV	532798
MS6	MS6-MV	532799

Module connector MS-MVM

Size	Type	Part no.
For installation of modules with regulating knob pointing downwards		
MS4	MS4-MVM	532800
MS6	MS6-MVM	532801

4 Mounting bracket MS-WB

Size	Type	Part no.
For wall mounting		
MS4	MS4-WB	532185
MS6	MS6-WB	532196

6 Mounting bracket MS-WR

Size	Type	Part no.
For wall mounting for filter regulator, pressure regulator		
MS4	ms4-wr	526064
MS6	ms6-wr	526075

17 Mounting bracket MS-WP

Size	Type	Part no.
For wall mounting		
MS4	MS4-WP	532184
MS6	MS6-WP	532195

18 Mounting bracket MS-WPB

Size	Type	Part no.
For wall mounting		
MS4	MS4-WPB	526063
MS6	MS6-WPB	526074

19 Mounting bracket MS-WPM

Size	Type	Part no.
For wall mounting		
MS4	MS4-WPM-D	526060
MS6	MS6-WPM-D	526073

Pressure regulators MS4/MS6/MS12-LR, MS series

FESTO

- Maintains a constant working pressure independent of pressure fluctuations and air consumption
- High flow rate with minimal pressure drop
- Connection G¼, G½
- Flow rate 1000 … 7500 l/min
- Operating pressure 0.8 … 20 bar
- Selected types in accordance with ATEX directive for potentially explosive atmospheres
  → **www.festo.com/en/ex**

Order code

001	002	003	004	005	006	007
MS		LR			AS	

Mandatory entry Optional entry

001	Type
MS	Standard service unit

002	Size
4	Grid dimension: 40 mm
6	Grid dimension: 62 mm
12	Grid dimension: 124 mm

003	Service function
LR	Pressure regulator

004	Pneumatic connection
1/4	Thread G¼
1/2	Thread G½

005	Pressure regulation range
D5	0.3 … 4 bar
D7	0.5 … 12 bar

006	Security
AS	Standard rotary knob with detent, can be locked using accessories

007	Direction of flow
–	From left to right

Product options

- Additional connection sizes
- Connecting plates
- Pressure regulation range/operation
- Pressure gauge alternatives
- Alternative pressure gauge scale
- Secondary venting
- Security
- Type of mounting
- EU certification
- UL certification
- Alternative direction of flow

Ordering – Product options

Configurable product

This product and all its product options can be ordered using the configurator.

The configurator can be found under Products at
→ **www.festo.com/catalogue/...**

Enter the type or the configuration part number in the search field.

Configuration part no.

002 **Size**	004 **Pneumatic connection**	**Standard nominal flow rate**	**Pressure regulation range**	**Max. pressure hysteresis**	Type	Part no.
MS4	G⅛ or G¼	1000 … 2200 l/min	0.3 … 12 bar	0.25 bar	MS4-LR	527690
MS6	G¼, G⅜, G½ or G¾	2200 … 7500 l/min	0.3 … 16 bar	0.25 bar	MS6-LR	527663
MS12	Connecting plate	12000 … 22000 l/min	0.15 … 16 bar	0.04 bar/0.4 bar	MS12-LR	535021

Pressure regulators MS4/MS6-LR, MS series

FESTO

Ordering – Basic design

		005 **Pressure regulation range 0.3 ... 4 bar**		005 **Pressure regulation range 0.3 ... 7 bar**		005 **Pressure regulation range 0.5 ... 12 bar**	
002 Size	004 Pneumatic connection	Type	Part no.	Type	Part no.	Type	Part no.
Integrated pressure gauge, display unit [bar], standard rotary knob with detent, can be locked using accessories							
MS4	G¼	MS4-LR-¼-D5-AS	529415	MS4-LR-¼-D6-AS	529417	MS4-LR-¼-D7-AS	529419
MS6	G½	MS6-LR-½-D5-AS	529989	MS6-LR-½-D6-AS	529991	MS6-LR-½-D7-AS	529993

Accessories

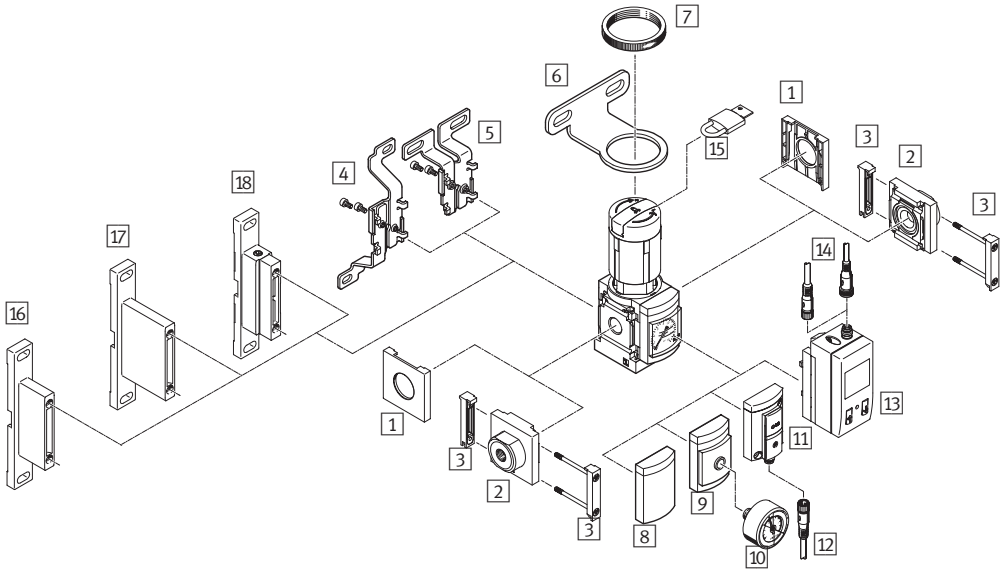

1 Cover cap MS-END ➔ ms4-end
2 Connecting plate set MS4/6-AG... ➔ 198
3 Module connector MS-MV ➔ 188
4 Mounting bracket MS-WB ➔ 188
5 Mounting bracket MS-WBM ➔ ms4-wbm
6 Mounting bracket MS-WR ➔ 188
7 Knurled nut (included in scope of delivery) MS-LR ➔ ms4-lr
8 Cover plate VS ➔ ms4-lr
9 Adapter for EN pressure gauge ⅛/¼ A8/A4 ➔ ms4-lr
10 Pressure gauge MA ➔ ma
11 Pressure sensor without display AD7 ... AD4 ➔ ms4-lr
12 Connecting cable NEBU-M8...-LE3 ➔ 229
13 Pressure sensor with display AD1 ... AD4 ➔ ms4-lr
14 Connecting cable NEBU-M8...-LE3/ NEBU-M12...-LE4 ➔ 229
15 Padlock LRVS-D ➔ lrvs
16 Mounting bracket MS-WP ➔ 188
17 Mounting bracket MS-WPB ➔ 188
18 Mounting bracket MS-WPM ➔ 188

On-off valves MS4/MS6-EM1, MS4/MS6-EE, MS series

FESTO

- For pressurising and venting pneumatic installations
- Connection G¼, G½
- Flow rate 1000 ... 8700 l/min
- Operating pressure 0 ... 18 bar
- Selected types in accordance with ATEX directive for potentially explosive atmospheres
  → **www.festo.com/en/ex**

Order code – Basic design

001	002		003		004		005		006
MS		–		–		–		–	

Mandatory entry Optional entry

001	Type
MS	Standard service unit

002	Size
4	Grid dimension: 40 mm
6	Grid dimension: 62 mm

003	Service function
EM1	Manually operated on-off valve
EE	Solenoid actuated on-off valve

004	Pneumatic connection
1/4	Female thread G¼
1/2	Female thread G½

005	Supply voltage
–	Without (manually operated on-off valve)
10V24	Supply voltage 24 V DC

006	Silencer
–	Without silencer
S	With silencer

Product options

- Additional connection sizes
- Silencers
- Connecting plates
- Pressure gauge/pressure gauge alternatives
- Alternative pressure gauge scale
- Supply voltage
- Type of mounting
- Valve function
- EU certification
- UL certification
- Direction of flow

Ordering – Product options

Configurable product

This product and all its product options can be ordered using the configurator.

The configurator can be found under Products at
→ **www.festo.com/catalogue/...**

Enter the type or the configuration part number in the search field.

Ordering – Basic design

		006 **Without silencer**		006 **With silencer**	
002 Size	004 Pneumatic connection	Type	Part no.	Type	Part no.
Manually operated on-off valve					
MS4	G¼	MS4-EM1-1/4	541258	MS4-EM1-1/4-S	541259
MS6	G½	MS6-EM1-1/2	541267	MS6-EM1-1/2-S	541268
Solenoid actuated on-off valve 006 Supply voltage 24 V DC					
MS4	G¼	MS4-EE-1/4-10V24	542578	MS4-EE-1/4-10V24-S	542598
MS6	G½	MS6-EE-1/2-10V24	542582	MS6-EE-1/2-10V24-S	542602

On-off valves MS4/MS6-EM1, MS4/MS6-EE, MS series

FESTO

Accessories

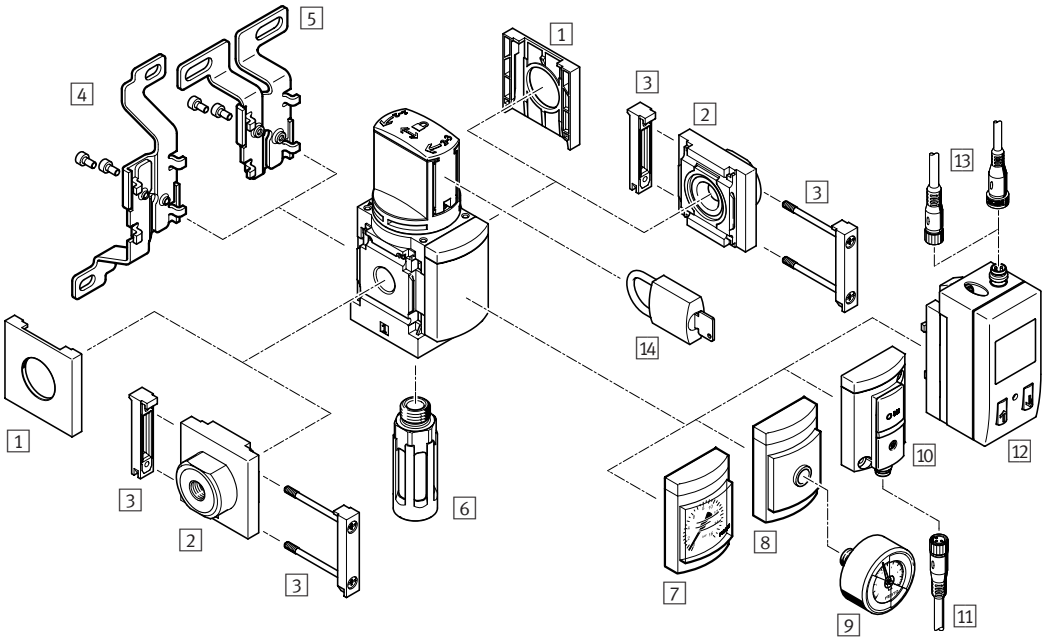

1 Cover cap MS-END ➔ ms4-end
2 Connecting plate set MS4/6-AG... ➔ 198
3 Module connector MS-MV ➔ 188
4 Mounting bracket MS-WB ➔ 188
5 Mounting bracket MS-WBM ➔ ms4-wbm
6 Silencer U ➔ 175
7 MS pressure gauge AG/RG ➔ ms4-em1
8 Adapter for EN pressure gauge ⅛/¼ A8/A4 ➔ ms4-em1
9 Pressure gauge MA ➔ ma
10 Pressure sensor without display AD7 ... AD4 ➔ ms4-em1
11 Connecting cable NEBU-M8...-LE3 ➔ 229
12 Pressure sensor with display AD1 ... AD4 ➔ ms4-em1
13 Connecting cable NEBU-M8...-LE3/ NEBU-M12...-LE4 ➔ 229
14 Padlock LRVS-D ➔ lrvs

Mounting bracket MS-WP ➔ 188
Mounting bracket MS-WPB ➔ 188
Mounting bracket MS-WPM ➔ 188

Soft-start/quick exhaust valves MS4/MS6-DL, MS6-SV, MS series

FESTO

MS-DL:
- For slowly pressurising and venting pneumatic installations (for use with on-off valves EM1 and EE)

MS-SV-C:
- For the gradual pressurisation and quick exhausting of system components (single channel)

- Connection G¼, G½
- Flow rate 1000 … 6450 l/min
- Operating pressure 3 … 18 bar
  Selected types in accordance with ATEX directive for potentially explosive atmospheres
  → **www.festo.com/en/ex**

Order code – Basic design

001	002	003	004	005	006	007
MS	–	–	–	–	–	

Mandatory entry Optional entry

001	Type
MS	Standard service unit

002	Size
4	Grid dimension: 40 mm
6	Grid dimension: 62 mm

003	Service function
DL	Pneumatically actuated soft-start valve
SV	Soft-start/quick exhaust valve

004	Pneumatic connection
1/4	Female thread G¼
1/2	Female thread G½

005	Performance Level
–	Without
C	Category 1, to EN ISO 13849-1

006	Supply voltage
–	Without (pneumatically actuated soft-start valve)
10V24	Supply voltage 24 V DC

007	Silencer
–	Without silencer
S	With silencer

Product options

- Additional connection sizes
- Connecting plates
- Supply voltage
- Pressure gauge/pressure gauge alternatives
- Alternative pressure gauge scale
- Type of mounting
- Tamper protection
- EU certification
- UL certification
- Direction of flow

Ordering – Product options

Configurable product

This product and all its product options can be ordered using the configurator.

The configurator can be found under Products at
→ **www.festo.com/catalogue/...**

Enter the type or the configuration part number in the search field.

Ordering – Basic design

002 Size	004 Pneumatic connection	Type	Part no.
Pneumatically actuated soft-start valve			
MS4	G¼	MS4-DL-1/4	529531
MS6	G½	MS6-DL-1/2	529817
Soft-start/quick exhaust valve			
MS4	G½	MS6-SV-½-C-10V24-S	8001469

Soft-start/quick exhaust valves MS4/MS6-DL, MS6-SV, MS series

FESTO

Accessories

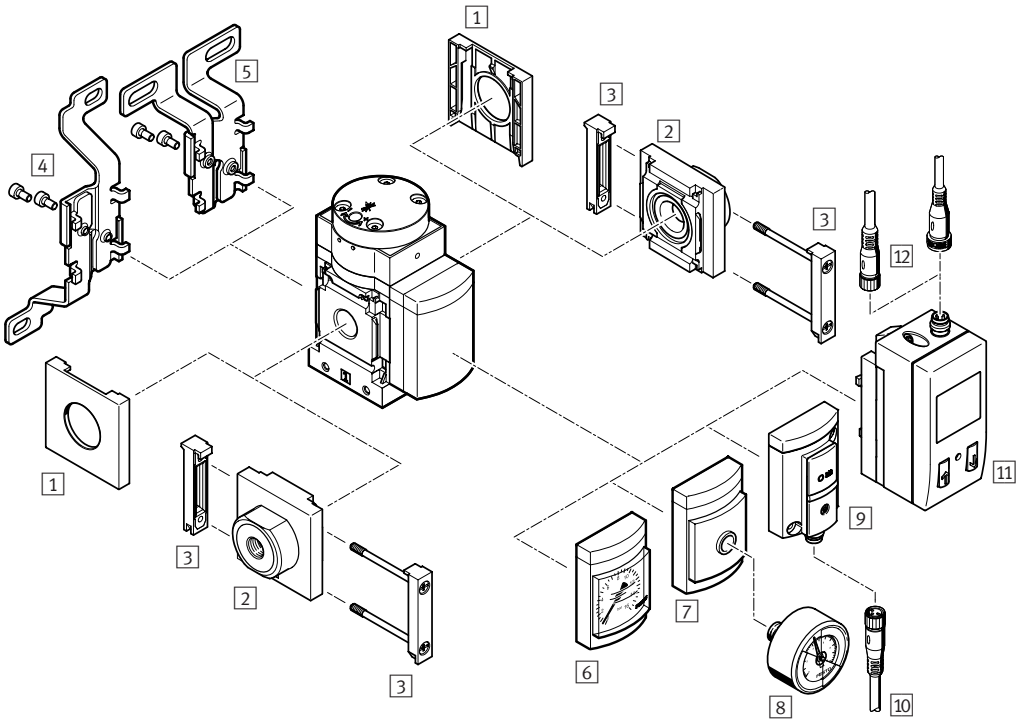

1 Cover cap MS-END ➔ ms4-end
2 Connecting plate set MS4/6-AG... ➔ 198
3 Module connector MS-MV ➔ 188
4 Mounting bracket MS-WB ➔ 188
5 Mounting bracket MS-WBM ➔ ms4-wbm
6 MS pressure gauge AG/RG ➔ ms4-dl
7 Adapter for EN pressure gauge ⅛/¼ A8/A4 ➔ ms4-dl
8 Pressure gauge MA ➔ ma
9 Pressure sensor without display AD7 ... AD4 ➔ ms4-dl
10 Connecting cable NEBU-M8...-LE3 ➔ 229
11 Pressure sensor with display AD1 ... AD4 ➔ ms4-dl
12 Connecting cable NEBU-M8...-LE3/ NEBU-M12...-LE4 ➔ 229

Mounting bracket MS-WP ➔ 188
Mounting bracket MS-WPB ➔ 188
Mounting bracket MS-WPM ➔ 188

Branching modules MS4/MS6-FRM, MS series

FESTO

- Can be used as an intermediate distributor for varying air qualities
- Outlet at top and bottom
- Flow rate 1750 ... 14700 l/min
- Operating pressure 0 ... 20 bar

Order code – Basic design

001	002		003		004		005
MS		–	FRM	–		–	

Mandatory entry Optional entry

001	Series
MS	Standard service unit

002	Size
4	Grid dimension: 40 mm
6	Grid dimension: 62 mm

003	Service function
FRM	Branching module

004	Pneumatic connection
1/4	Female thread G¼
1/2	Female thread G½

005	Non-return function/pressure switch
–	Standard

Product options

- Additional connection sizes
- Connecting plates
- Pressure gauge/pressure gauge alternatives
- Alternative pressure gauge scale
- Pressure switch
- Type of mounting
- EU certification
- UL certification
- Direction of flow

Ordering – Product options

Configurable product

This product and all its product options can be ordered using the configurator.

The configurator can be found under Products at
➔ **www.festo.com/catalogue/...**

Enter the type or the configuration part number in the search field.

Ordering – Basic design

002 Size	004 Pneumatic connection	Type	Part no.
MS6	G¼	MS6-FRM-1/4	529857
MS6	G½	MS6-FRM-1/2	529853

FESTO

Accessories

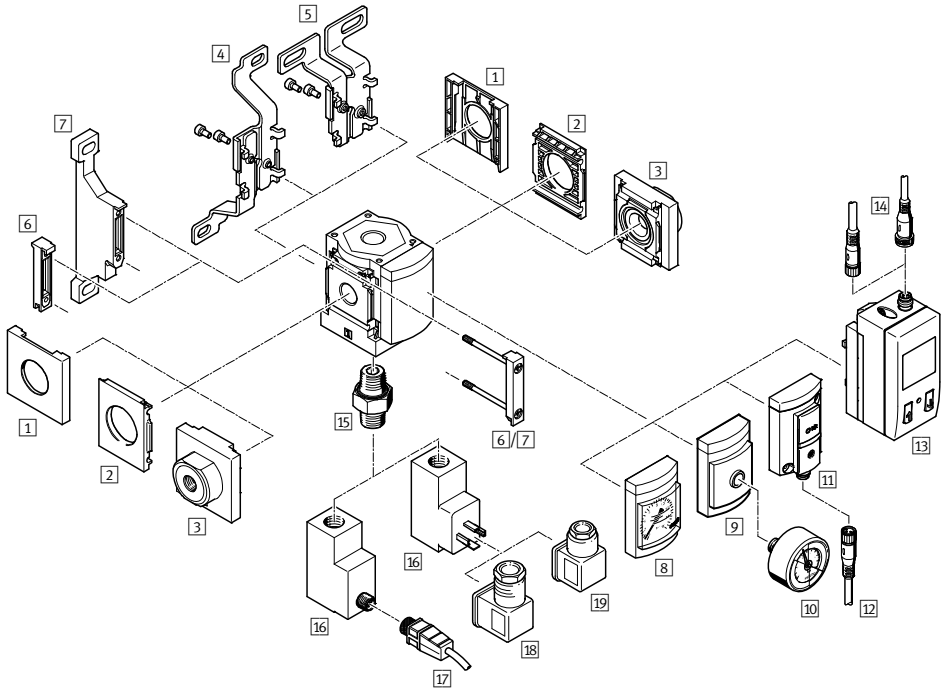

1 Cover cap MS4-END ➔ ms4-end
2 Mounting plate MS4/6-AEND ➔ ms4-aend
3 Connecting plate set MS4/6-AG... ➔ 198
4 Mounting bracket MS-WB ➔ 188
5 Mounting bracket MS4-WBM ➔ ms4-wbm
6 Module connector MS-MV ➔ 188
7 Mounting bracket MS-WB ➔ 188
8 MS pressure gauge AG ➔ ms6-frm
9 Adapter for EN pressure gauge ⅛/¼ A8/A4 ➔ ms6-frm
10 Pressure gauge MA ➔ ma
11 Pressure sensor without display AD7 ... AD10 ➔ ms6-frm
12 Connecting cable NEBU-M8...-LE3 ➔ 229
13 Pressure sensor with display AD1 ... AD4 ➔ ms6-frm
14 Connecting cable NEBU-M8...-LE3/ NEBU-M12...-LE4 ➔ 229
15 Double nipple ESK ➔ ms6-frm
16 Pressure switch PEV ➔ pev
17 Connecting cable NEBU-M12...-LE4 ➔ 229
18 Angled socket PEV-1/4-WD-LED ➔ pev
19 Plug socket MSSD-C-4P ➔ mssd

Distributor blocks MS4/MS6-FRM-FRZ, MS series

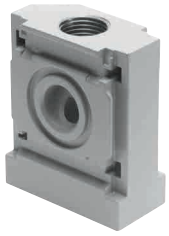

- Can be used as an adapter between two pressure regulators
- Outlet at top and bottom
- Flow rate 4050... 14600 l/min
- Operating pressure 0 ... 20 bar

Order code

001	002		003		
MS		–	FRM	–	FRZ

Mandatory entry

001	Series
MS	Standard service unit

002	Size
4	Grid dimension: 40 mm
6	Grid dimension: 62 mm

003	Service function
FRM-FRZ	Distributor block

Ordering

002 Size	Pneumatic connection 3, 4	Type	Part no.
MS4	G¼	MS4-FRM-FRZ	549336
MS6	G½	MS6-FRM-FRZ	549337

Connecting plates MS4/MS6-AG...

FESTO

- Adapter for pneumatic connection
- MS6-AGE for implementing threaded connection G¾

Ordering

002 Size	Pneumatic connection	Type	Part no.
MS4	G¼	MS4-AGB	526069
MS4	G⅜	MS4-AGC	526070
MS6	G½	MS6-AGD	526082
MS6	G¾	MS6-AGE	526083

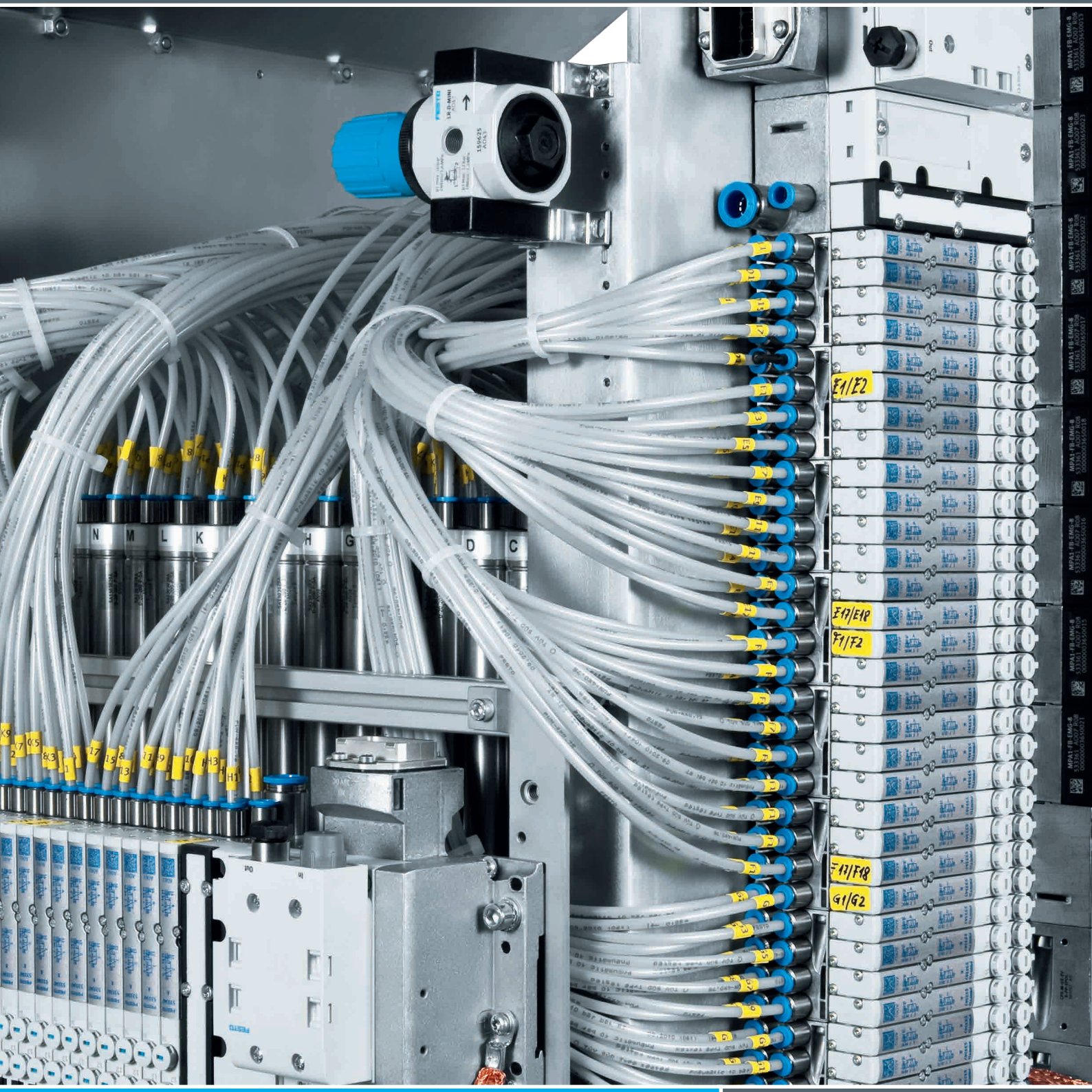

Pneumatic connection technology

11

Highlights

PUN
PUN-H

Plastic tubing

+ PUN: large selection of variants and highly resistant to stress cracks
+ PUN-H: high resistance to microbes and hydrolysis and approved for use in the food industry
+ PUN-H-T: translucent black, blue, green, red, yellow

Page 205

NPQH

Push-in fittings

+ All-metal push-in fittings made of chemically nickel-plated brass
+ High corrosion and chemical resistance

Page 208

QS
QSM

Push-in fittings

+ QS: standard series for maximum flexibility in standard applications
+ QSM: mini series for maximum component density in confined installation spaces

Page 212, 217

NPHS

Quick coupling sockets, quick coupling plugs

+ For simple and completely safe decoupling
+ High flow rate

Page 223

Contents

Product overview 201
Overview 204
Plastic tubing PUN, standard O. D. 205
Push-in fittings NPQH 208
Push-in fittings QS, standard series 212
Push-in fittings QSM, mini series 217
Threaded fittings NPFC. 219
Blanking plugs B-... 222
Quick coupling sockets/plugs
NPHS, KD/KS 223

FESTO

Software tool

Product finder for tubing	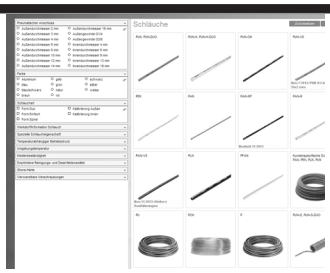	Simply enter parameters such as working pressure, chemicals and required resistance to cleaning agents and have the program calculate the right tubing for your application.	This tool can be found • in the electronic catalogue by clicking on the blue button “Product finder”
Festo Design Tool 3D FDT 3D	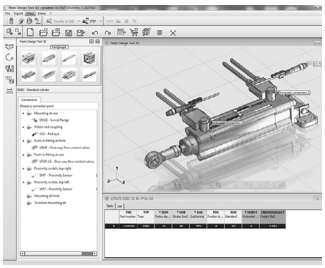	The Festo Design Tool 3D is a 3D product configurator for generating specific CAD product combinations from Festo. The configurator makes your search for the right accessory easier, more reliable and faster. You can then order the module that has been created as a single order item – either completely pre-assembled or as individual parts in a single box. As a result, your bill of materials is considerably shortened and downstream processes such as product ordering, order picking and assembly are significantly simplified.	All ordering options are available in the following countries: AT, BE, CH, CZ, DE, DK, ES, EST, FI, FR, GB, GR, HU, IE, IT, NL, NO, PL, PT, RU, SE, SI, SK, TR, ZA. This tool can be found • either via the address: www.festo.com/FDT-3D in the above listed countries.

O. D. tubing

	 Plastic tubing, DUO tubing **PUN, PUN-DUO**	 **Plastic tubing, DUO tubing** **PUN-H, PUN-H-T, PUN-H-DUO**
O. D.	3 … 16 mm	2 … 16 mm
I. D.	2.1 … 11 mm	1.2 … 11 mm
Temperature-dependent operating pressure	–0.95 … 10 bar	–0.95 … 10 bar
Ambient temperature	–35 … 60 °C	–35 … 60 °C
Description	• Polyurethane • High resistance to stress cracks • Suitable for energy chains • Also available as DUO tubing • Operating media: compressed air, vacuum	• Polyurethane • High resistance to microbes and hydrolysis • See supplementary material information for suitability for use in the food industry ➔ www.festo.com/sp › Certificates • Suitable for energy chains • Also available as DUO tubing • Operating media: compressed air, vacuum, water
➔ **Page/online**	**205**	**205**

FESTO

O. D. tubing

	Plastic tubing PEN	Plastic tubing PLN
O. D.	4 … 16 mm	4 … 16 mm
I. D.	2.7 … 10.8 mm	2.9 … 12 mm
Temperature-dependent operating pressure	–0.95 … 10 bar	–0.95 … 14 bar
Ambient temperature	–30 … 60 °C	–30 … 80 °C
Description	• Polyethylene • High resistance to chemicals and very high resistance to hydrolysis • Resistant to most cleaning agents and lubricants • Suitable for energy chains • Operating media: compressed air, vacuum, water	• Polyethylene • High resistance to chemicals, microbes and hydrolysis • See supplementary material information for suitability for use in the food industry ➔ www.festo.com/sp › Certificates • Resistant to most cleaning agents and lubricants • Operating media: compressed air, vacuum, water
➔ **Page/online**	pen	pln

Push-in fittings

	Push-in fittings NPQH	**Push-in fittings, metal, standard NPQM**	**Push-in fittings, standard QS**	**Push-in fittings, mini series QSM**
Pneumatic connection 1	Male thread M5, M7, G1/8, G1/4, G3/8, G1/2, for tubing O. D. 4 mm, 6 mm, 8 mm, 10 mm, 12 mm, 14 mm, female thread G1/8, G1/4, push-in sleeve QS-10, QS-12, QS-14, QS-4, QS-6, QS-8	G1/8, G1/4, G3/8, G1/2, M5, M7, push-in sleeve QS-4, QS-6, QS-8, QS-10, QS-12, for tubing O. D. 4, 6, 8, 10, 12 mm	Male thread G1/8, G1/4, G3/8, G1/2, M5, R1/8, R1/4, R3/8, R1/2, female thread G1/8, G1/4, G3/8, G1/2, push-in sleeve QS-4, QS-6, QS-8, QS-10, QS-12, QS-16, for tubing O. D. 4, 6, 8, 10, 12, 16 mm	Male thread G1/8, M3, M5, M6, M6x0.75, M7, M8x0,75, R1/8, female thread M3, M5, push-in sleeve QS-3, QS-4, QS-6, for tubing O. D. 2, 3, 4, 6 mm
Pneumatic connection 2	For tubing O. D. 4 mm, 6 mm, 8 mm, 10 mm, 12 mm, 14 mm, push-in sleeve QS-10, QS-12, QS-14, QS-4, QS-6, QS-8	For tubing O. D. 3, 4, 6, 8, 10, 12 mm	Female thread G1/8, G1/4, G3/8, G1/2, for tubing O. D. 4, 6, 8, 10, 12, 16 mm	For tubing O. D. 2, 3, 4, 6 mm
Temperature-dependent operating pressure			–0.95 … 14 bar	–0.95 … 14 bar
Operating pressure for entire temperature range	–0.95 … 20 bar	–0.95 … 16 bar	–0.95 … 6 bar	–0.95 … 6 bar
Ambient temperature	0 … 150 °C	–20 … 70 °C	–10 … 80 °C	–10 … 80 °C
Description	• Solid-metal brass, chemically nickel-plated • High corrosion and chemical resistance • Highly resistant to temperatures and pressure • See supplementary material information for suitability for use in the food industry ➔ www.festo.com/sp › Certificates • Operating media: compressed air, vacuum, water	• Solid-metal brass, nickel-plated • Attractively priced metal push-in fitting • Sturdy • Operating media: compressed air, vacuum, water	• Standard series • Wide range of variants: large selection for maximum flexibility in standard applications • PBT and nickel-plated brass • Operating media: compressed air, vacuum, (water)	• Mini series • Compact for maximum component density in confined installation spaces • PBT and nickel-plated brass • Operating media: compressed air, vacuum
➔ **Page/online**	**208**	npqm	**212**	**217**

FESTO

Threaded fittings

	 Threaded fittings **NPFC**	 **Blanking plug** **B**
Pneumatic connection 1	G1/8, G1/4, G3/8, G1/2, G3/4, G1, M5, M7, R1/8, R1/4, R3/8, R1/2, R3/4, R1	
Pneumatic connection 2	G1/8, G1/4, G3/8, G1/2, G3/4, M5, R1/8, R1/4, R3/8, R1/2, R3/4, R1	
operating pressure	–0.95 ... 50 bar	
Ambient temperature	–20 ... 150 °C	
Description	• Nickel-plated brass • Sleeve • Reducing sleeve • Extension • Double nipple • Reducing nipple • L-, T-, Y- or X-fitting • Operating media: compressed air, vacuum	• Aluminium, stainless steel • With sealing ring
➔ **Page/online**	**219**	**222**

Couplings

	 Quick coupling sockets, quick coupling plugs **NPHS-D6, NPHS-S6**	 **Quick coupling sockets, quick coupling plugs** KD1, KD2, KD3, **KD4**, KD5, KS1, KS2, KS3, KS4, KS5
Pneumatic connection 1	Male thread G1/4, G1/2, G3/8, for plug-in nipple I.D. 9 mm	Male thread M3, M5, G1/8, G1/4, G1/2, G3/8, female thread, G1/4, G3/8, G1/2, CK-3, CK-4, CK-6, CK-9, CK13, N6, N-9
Standard nominal flow rate	875 ... 2083 l/min	44 ... 2043 l/min
Operating pressure	-0.95 ... 20 bar	0.95 ... 12 bar
Ambient temperature	-10 ... 80 °C	10 ... 80 °C
Description	• Safety coupling • Shut-off at one end • Releasing sleeve made of metal or polymer • Exhaust the air on the connector side without releasing the coupling • Combination of coupling and hand slide valve • Can be used as an on-off valve	• Quick connection coupling for standard applications without safety function • Shut-off at one or both ends • With male or female thread or with barbed fitting or quick connector • Nickel-plated brass, PP • Operating media: compressed air, vacuum
➔ **Page/online**	**223**	**223**

FESTO

Everything from a single source – for the ideal combination

Our range of tubing and fittings covers every conceivable task. Regardless of whether your selection is determined by standard requirements or extreme conditions such as heat, welding spatter, high pH values or resistance to hydrolysis – at Festo you'll always find the right tubing/fitting combination.

Tubing

Materials	Polyurethane (PU)					Polyethylene (PE)		Polyamide (PA)				Perfluoralkoxy alkane
Designation	PUN/PUN-DUO → 205	PUN-H/ PUN-H-DUO → 205	PUN-CM → pun	PUN-V0 → pun-v0	PUN-V0-C → pun-v0	PEN → pen	PLN → pln	PAN → pan	PAN-R → pan-r	PAN-V0 → pan-v0	PAN-MF → pan-mf	PFAN → pfan
Operating medium	Compressed air, vacuum	Compressed air, vacuum, water[1]	Compressed air, vacuum	Compressed air, vacuum, water[1]	Compressed air, vacuum, water[1]	Compressed air, vacuum, water[1]	Compressed air, vacuum, water[1]	Compressed air, vacuum	Compressed air, vacuum	Compressed air, vacuum, water[1]	Compressed air, vacuum	Compressed air, vacuum, water[1]
Temperature [°C]	–35 … +60	–35 … +60	–35 … +60	–35 … +60	–35 … +60	–30 … +60	–30 … +80	–30 … +80	–30 … +80	–30 … +90	–60 … +100	–20 … +150
Temperature-dependent operating pressure [bar]	–0.95 … +10	–0.95 … +10	–0.95 … +10	–0.95 … +10	–0.95 … +10	–0.95 … +10	–0.95 … +14	–0.95 … +19	–0.95 … +35	–0.95 … +12	–0.95 … +31	–0.95 … +16
Resistant to chemicals	–	+	+	+	+	++	++	+	+	+	+	+++
Food-safe [2]	–	+++ FDA	–	–	–	–	+++ EG 1935/ 2004	–	–	–	–	+++ FDA
Hydrolysis-resistant	+	++	++	++	++	+++	+++	++	++	++	++	+++
Fire tested	–	–	–	UL 94 DIN 5510-2	UL 94 DIN 5510-2	–	–	–	–	UL 94	–	UL 94
Halogen free	+++	+++	+++	+++	+++	+++	+++	+++	+++	–	+++	–
Flexibility	+++	+++	++	++	++	++	+	++	+	++	+	+
Special features	Wide choice of variants	Hydrolysis-resistant	Anti-static	Flame-retardant	Resistant to welding spatter	Suitable for use with energy chains	Weather-resistant	High load bearing capacity	Suitable for pressure up to 35 bar	Resistant to welding spatter	DIN 73378 KFZ approval	Highly resistant to chemicals

1) Other media on request
2) Suitable for use with food as per manufacturer's declaration

Fittings

Materials	Plastic				Metal				
Designation	NPKA → npka	NPQP → npqp	QS, QSM → 212, 217	QS-V0 → qs-0	NPQM → npqm	NPQH → 208	NPFC → 219	NPCK → npck	CRQS → crqs
Operating medium	Compressed air, vacuum, water[1]	Compressed air, vacuum	Compressed air, vacuum, water[1]	Compressed air, vacuum, water[1]	Compressed air, vacuum, water[1]	Compressed air, vacuum, water[1]	Compressed air, vacuum[1]	Compressed air, vacuum, water[1]	Compressed air, vacuum, water[1]
Temperature [°C]	–10 … +60	–20 … +60	–10 … +80	0 … +60	–20 … +70	0 … +150	–20 … +150	–20 … +120	–15 … +120
Temperature-dependent operating pressure [bar]	–0.95 … +10	–0.95 … +10	–0.95 … +14	–0.95 … +10	–0.95 … +16	–0.95 … +20	–0.95 … +50	–0.95 … +12	–0.95 … +10
Housing material	POM and PA66	PP	PBT and nickel-plated brass	PBT	Nickel-plated brass	Nickel-plated brass	Nickel-plated brass	Stainless steel	Stainless steel
Thread	G thread	R thread	M, G and R thread	G and R threads	M and G thread	M and G thread	M, G and R thread	M and G thread	M and R thread
Resistant to chemicals	++	+++	+	+	+	++	+	+++	+++
Food-safe [2]	+++ FDA	+++ FDA	–	–	–	+++ FDA	–	+++ FDA	+++ EG 1935/2004
Corrosion resistance class (CRC)	4	4	1	1	1	3	1	4	4
Special features	Cleanroom-compatible, 100% polymer	FDA-compliant internal and external parts	Wide choice of variants	Resistant to welding spatter	Sturdy	Resistant to high temperatures	Efficient, suitable for high pressures	Clean Design	Highly resistant to corrosion

1) Other media on request
2) Suitable for use with food as per manufacturer's declaration

Reliable selection has never been this easy: our product finder for tubing and fittings helps you to select a tailored combination.
Get started by following these links:
→ **www.festo.com/productfinder/tubing**
→ **www.festo.com › Products › Product Finder › Pneumatic fittings systems › Push-in fittings**

Plastic tubing PUN, standard O. D.

FESTO

- Extremely flexible polyurethane tubing
- High resistance to stress cracks
- Suitable for use with energy chains
- Operating media: compressed air, vacuum, water
- Suitable for use with food and FDA-compliant
- Individual configuration for plastic tubing

Order code – Basic design

001	002	003	004	005
PUN	–		–	–

Mandatory entry Optional entry

001	Type
PUN	Polyurethane tubing, standard O. D.

002	Alternative material characteristic
–	Standard
H	Hydrolysis-resistant, approved for use in the food industry

003	O. D. x wall thickness [mm]
2x0,4	2.0 x 0.4
3x0,5	3.0 x 0.5
4x0,75	4.0 x 0.75
6x1	6.0 x 1.0
8x1	8.0 x 1.0
8x1,25	8.0 x 1.25
10x1,5	10 x 1.5
12x1,75	12.0 x 1.75
12x2	12.0 x 2.0
14x2	14.0 x 2.0
16x2,5	16.0 x 2.5

004	Colour
NT	Natural
BK	Black
BL	Blue
SI	Silver
TBL	Translucent blue
TGE	Translucent yellow
TGN	Translucent green
TRT	Translucent red
TSW	Translucent black

005	Packaging unit
–	50 m

Product options

Materials:
PAN Polyamide
PFAN Perfluoralkoxy alkane
PEN Polyethylene

Certifications:
CM Anti-static
H Hydrolysis-resistant
V0 Flame-retardant to UL 94 V0
R Sturdy
MF Automotive approval certificate
V0C Resistant to welding spatter

Paired tubing:
DUO DUO tubing

Packaging units:
100 m, 200 m, 300 m, 400 m, 500 m

Customer-specific tubing inscription

Colours:
GN Green
RT Red
WS White
GE Yellow
BR Brown
BS Blue/Black

Ordering – Product options

Configurable product

This product and all its product options can be ordered using the configurator.

The configurator can be found under Products at
➔ **www.festo.com/catalogue/...**

Enter the type or the configuration part number in the search field.

Plastic tubing PUN, standard O. D.

FESTO

Ordering – Basic design

003 O. D. [mm]	004 Colour	001 PUN: Polyurethane		001 + 002 PUN-H: Polyurethane, hydrolysis-resistant		001 + 002 PUN-H-T: Polyurethane, hydrolysis-resistant, translucent	
		Type	Part no.	Type	Part no.	Type	Part no.
2,0	Natural	–		–		PUN-H-2X0,4-NT	133038
	Black	–		PUN-H-2x0,4-SW	133039	–	
3,0	Natural	–		–		PUN-H-3X0,5-NT	197375
	Silver	PUN-3x0,5-SI	152583	PUN-H-3x0,5-SI	558277	–	
	Blue	PUN-3x0,5-BL	159660	PUN-H-3x0,5-BL	197382	–	
	Black	PUN-3x0,5-SW	159661	PUN-H-3x0,5-SW	197389	–	
4,0	Natural	–		–		PUN-H-4X0,75-NT	197376
	Silver	PUN-4x0,75-SI	152584	PUN-H-4x0,75-SI	558278	–	
	Yellow	–		–		PUN-H-4X0,75-TGE	8048679
	Red	–		–		PUN-H-4X0,75-TRT	8048675
	Green	–		–		PUN-H-4X0,75-TGN	8048677
	Blue	PUN-4x0,75-BL	159662	PUN-H-4x0,75-BL	197383	PUN-H-4X0,75-TBL	8048671
	Black	PUN-4x0,75-SW	159663	PUN-H-4x0,75-SW	197390	PUN-H-4X0,75-TSW	8048673
6,0	Natural	–		–		PUN-H-6X1-NT	197377
	Silver	PUN-6x1-SI	152586	PUN-H-6x1-SI	558279	–	
	Yellow	–		–		PUN-H-6X1-TGE	8048689
	Red	–		–		PUN-H-6X1-TRT	8048685
	Green	–		–		PUN-H-6X1-TGN	8048687
	Blue	PUN-6x1-BL	159664	PUN-H-6x1-BL	197384	PUN-H-6X1-TBL	8048681
	Black	PUN-6x1-SW	159665	PUN-H-6x1-SW	197391	PUN-H-6X1-TSW	8048683
8,0	Natural	–		–		PUN-H-8X1,25-NT	197378
	Silver	PUN-8x1,25-SI	152587	PUN-H-8x1,25-SI	558280	–	
	Yellow	–		–		PUN-H-8X1,25-TGE	8048699
	Red	–		–		PUN-H-8X1,25-TRT	8048695
	Green	–		–		PUN-H-8X1,25-TGN	8048697
	Blue	PUN-8x1,25-BL	159666	PUN-H-8x1,25-BL	197385	PUN-H-8X1,25-TBL	8048691
	Black	PUN-8x1,25-SW	159667	PUN-H-8x1,25-SW	197392	PUN-H-8X1,25-TSW	8048693
10,0	Natural	–		–		PUN-H-10X1,5-NT	197379
	Silver	PUN-10x1,5-SI	152588	PUN-H-10x1,5-SI	558281	–	
	Yellow	–		–		PUN-H-10X1,5-TGE	8048709
	Red	–		–		PUN-H-10X1,5-TRT	8048705
	Green	–		–		PUN-H-10X1,5-TGN	8048707
	Blue	PUN-10x1,5-BL	159668	PUN-H-10x1,5-BL	197386	PUN-H-10X1,5-TBL	8048701
	Black	PUN-10x1,5-SW	159669	PUN-H-10x1,5-SW	197393	PUN-H-10X1,5-TSW	8048703
12,0	Natural	–		–		PUN-H-12X2-NT	197380
	Silver	PUN-12x2-SI	152589	PUN-H-12x2-SI	558282	–	
	Yellow	–		–		PUN-H-12X2-TGE	8048719
	Red	–		–		PUN-H-12X2-TRT	8048715
	Green	–		–		PUN-H-12X2-TGN	8048717
	Blue	PUN-12x2-BL	159670	PUN-H-12x2-BL	197387	PUN-H-12X2-TBL	8048711
	Black	PUN-12x2-SW	159671	PUN-H-12x2-SW	197394	PUN-H-12X2-TSW	8048713
14,0	Silver	PUN-14x2-SI	570389	–		–	
	Blue	PUN-14x2-BL	570390	PUN-H-14x2-BL	570386	–	
	Black	PUN-14x2-SW	570391	PUN-H-14x2-SW	570387	–	
16,0	Natural	–		–		PUN-H-16X2,5-NT	197381
	Silver	PUN-16x2,5-SI	152590	PUN-H-16x2,5-SI	558283	–	
	Blue	PUN-16x2,5-BL	159672	PUN-H-16x2,5-BL	197388	–	
	Black	PUN-16x2,5-SW	159673	PUN-H-16x2,5-SW	197395	–	

FESTO

Possible fittings

Fitting		PUN	PUN-H
Push-in fitting QS, Standard series ➔ 212		■ Recommended fitting	■ Recommended fitting
Push-in fitting NPQH, metal ➔ 208		■	■ Recommended fitting
Push-in fitting NPQM ➔ npqm		■	■
Quick connector CK ➔ ck		■	■

Push-in fittings NPQH

FESTO

NPQH-H-G18F-Q8-P10

NPQH-H-Q4-E-P10

NPQH-L-G14-Q10-P10

NPQH-T-G14-Q6-P10

NPQH-D-S8-Q6-P10

NPQH-D-Q8-E-P10

NPQH-Y-Q10-E-P10

NPQH-P-S8-P10

- All metal push-in fitting/connector made of chemically nickel-plated brass
- High corrosion and chemical resistance
- FDA-compliant for the food and packaging industry
- For pneumatic applications with a temperature range up to 150 °C and a pressure range up to 20 bar

Order code

001	002	003	004	005	006	007	008
NPQH –	[ ]	[ ]	[ ] –	[ ] –	[ ] –	[ ] –	[ ]

[ ] Mandatory entry [ ] Optional entry

001	Type
NPQH	All metal push-in fitting

002	Design
B	Plug screw
D	Straight
H	Push-in bulkhead connector
L	L-shape
P	Blanking plug
T	T-shape
Y	Y-shape

003	Additional features
–	Without
L	Long

004	Mounting method
–	Standard
C	Internal hexagon

005	Pneumatic connection 1		
M5	M thread M5	**Q10**	Push-in connector 10 mm
M7	M thread M7	**Q12**	Push-in connector 12 mm
G18	G thread G⅛	**Q14**	Push-in connector 14 mm
G14	G thread G¼	**S4**	Push-in sleeve 4 mm
G38	G thread G⅜	**S6**	Push-in sleeve 6 mm
G12	G thread G½	**S8**	Push-in sleeve 8 mm
Q4	Push-in connector 4 mm	**S10**	Push-in sleeve 10 mm
Q6	Push-in connector 6 mm	**S12**	Push-in sleeve 12 mm
Q8	Push-in connector 8 mm	**S14**	Push-in sleeve 14 mm

006	Connection type
–	Standard
F	Female thread

007	Pneumatic connection 2		
–	Without	**Q14**	Push-in connector 14 mm
E	Same size as connection 1	**S4**	Push-in sleeve 4 mm
Q4	Push-in connector 4 mm	**S6**	Push-in sleeve 6 mm
Q6	Push-in connector 6 mm	**S8**	Push-in sleeve 8 mm
Q8	Push-in connector 8 mm	**S10**	Push-in sleeve 10 mm
Q10	Push-in connector 10 mm	**S12**	Push-in sleeve 12 mm
Q12	Push-in connector 12 mm	**S14**	Push-in sleeve 14 mm

008	Packaging unit quantity
–	1 piece
P10	10 pieces

Product options

Additional features:

S Rotatable

LS Long, rotatable

Ordering – Product options

Configurable product

This product and all its product options can be ordered using the configurator.

The configurator can be found under Products at
➔ **www.festo.com/catalogue/...**

Enter the type or the configuration part number in the search field.

FESTO

Ordering

Push-in fitting NPQH-D
Male thread with external hexagon

Connection 1	Connection 2	Type	Part no.
M thread with sealing ring			
M5	4 mm	NPQH-D-M5-Q4-P10	578334
	6 mm	NPQH-D-M5-Q6-P10	578335
M7	4 mm	NPQH-D-M7-Q4-P10	578336
	6 mm	NPQH-D-M7-Q6-P10	578337
G thread with sealing ring			
G⅛	4 mm	NPQH-D-G18-Q4-P10	578338
	6 mm	NPQH-D-G18-Q6-P10	578339
	8 mm	NPQH-D-G18-Q8-P10	578340
G¼	6 mm	NPQH-D-G14-Q6-P10	578341
	8 mm	NPQH-D-G14-Q8-P10	578342
	10 mm	NPQH-D-G14-Q10-P10	578343
	12 mm	NPQH-D-G14-Q12-P10	578344
G⅜	8 mm	NPQH-D-G38-Q8-P10	578345
	10 mm	NPQH-D-G38-Q10-P10	578346
	12 mm	NPQH-D-G38-Q12-P10	578347
	14 mm	NPQH-D-G38-Q14-P10	578348
G½	10 mm	NPQH-D-G12-Q10	578349
	12 mm	NPQH-D-G12-Q12	578350
	14 mm	NPQH-D-G12-Q14	578351

Push-in fitting NPQH-D
Female thread with external hexagon

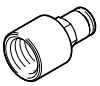

Connection 1	Connection 2	Type	Part no.
G⅛	4 mm	NPQH-D-G18F-Q4-P10	578352
	6 mm	NPQH-D-G18F-Q6-P10	578353
	8 mm	NPQH-D-G18F-Q8-P10	578354
G¼	4 mm	NPQH-D-G14F-Q4-P10	578355
	6 mm	NPQH-D-G14F-Q6-P10	578356
	8 mm	NPQH-D-G14F-Q8-P10	578357

Push-in fitting NPQH-D
with push-in sleeve

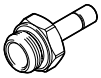

Connection 1	Connection 2	Type	Part no.
M thread with sealing ring			
M5	4 mm	NPQH-D-M5-S4-P10	578358
	6 mm	NPQH-D-M5-S6-P10	578359
G thread with sealing ring			
G⅛	4 mm	NPQH-D-G18-S4-P10	578360
	6 mm	NPQH-D-G18-S6-P10	578361
	8 mm	NPQH-D-G18-S8-P10	578362
G¼	6 mm	NPQH-D-G14-S6-P10	578363
	8 mm	NPQH-D-G14-S8-P10	578364
	10 mm	NPQH-D-G14-S10-P10	578365
	12 mm	NPQH-D-G14-S12-P10	578366
G⅜	10 mm	NPQH-D-G38-S10-P10	578367
	12 mm	NPQH-D-G38-S12-P10	578368
G½	12 mm	NPQH-D-G12-S12	578369

Push-in fitting NPQH-DK
Male thread with internal hexagon

Connection 1	Connection 2	Type	Part no.
M thread with sealing ring			
M5	4 mm	NPQH-DK-M5-Q4-P10	578370
	6 mm	NPQH-DK-M5-Q6-P10	578371
M7	4 mm	NPQH-DK-M7-Q4-P10	578372
	6 mm	NPQH-DK-M7-Q6-P10	578373
G thread with sealing ring			
G⅛	4 mm	NPQH-DK-G18-Q4-P10	578374
	6 mm	NPQH-DK-G18-Q6-P10	578375
	8 mm	NPQH-DK-G18-Q8-P10	578376
G¼	8 mm	NPQH-DK-G14-Q8-P10	578377
	10 mm	NPQH-DK-G14-Q10-P10	578378
G⅜	12 mm	NPQH-DK-G38-Q12-P10	578379

Push-in connector NPQH-D

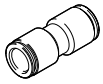

Connection 1	Connection 2	Type	Part no.
4 mm	4 mm	NPQH-D-Q4-E-P10	578323
6 mm	6 mm	NPQH-D-Q6-E-P10	578324
8 mm	8 mm	NPQH-D-Q8-E-P10	578325
10 mm	10 mm	NPQH-D-Q10-E-P10	578326
12 mm	12 mm	NPQH-D-Q12-E-P10	578327
14 mm	14 mm	NPQH-D-Q14-E-P10	578328

Push-in connector NPQH-D

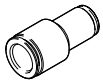

Connection 1	Connection 2	Type	Part no.
Reducing			
6 mm	4 mm	NPQH-D-Q6-Q4-P10	578329
8 mm	6 mm	NPQH-D-Q8-Q6-P10	578330
12 mm	8 mm	NPQH-D-Q12-Q8-P10	578331
14 mm	10 mm	NPQH-D-Q14-Q10-P10	578332
14 mm	12 mm	NPQH-D-Q14-Q12-P10	578333

Push-in connector NPQH-D
with push-in sleeve

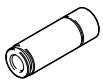

Connection 1	Connection 2	Type	Part no.
4 mm	6 mm	NPQH-D-S6-Q4-P10	578304
	8 mm	NPQH-D-S8-Q4-P10	578305
	10 mm	NPQH-D-S8-Q6-P10	578306
6 mm	8 mm	NPQH-D-S10-Q4-P10	578307
	10 mm	NPQH-D-S10-Q6-P10	578308
	12 mm	NPQH-D-S10-Q8-P10	578309
	14 mm	NPQH-D-S12-Q6-P10	578310
8 mm	10 mm	NPQH-D-S12-Q8-P10	578311
	12 mm	NPQH-D-S12-Q10-P10	578312
	14 mm	NPQH-D-S14-Q6-P10	578313
10 mm	12 mm	NPQH-D-S14-Q8-P10	578314
	14 mm	NPQH-D-S14-Q10-P10	578315
12 mm	14 mm	NPQH-D-S14-Q12-P10	578316

FESTO

Ordering

Push-in sleeve NPQH-D

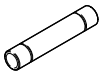

Connection 1	Connection 2	Type	Part no.
4 mm	4 mm	NPQH-D-S4-E-P10	578317
6 mm	6 mm	NPQH-D-S6-E-P10	578318
8 mm	8 mm	NPQH-D-S8-E-P10	578319
10 mm	10 mm	NPQH-D-S10-E-P10	578320
12 mm	12 mm	NPQH-D-S12-E-P10	578321
14 mm	14 mm	NPQH-D-S14-E-P10	578322

Push-in bulkhead fitting NPQH-H
Female thread with external hexagon

Connection 1	Connection 2	Type	Part no.
G thread with sealing ring			
G⅛	4 mm	NPQH-H-G18F-Q4-P10	578294
	6 mm	NPQH-H-G18F-Q6-P10	578295
	8 mm	NPQH-H-G18F-Q8-P10	578296
G¼	6 mm	NPQH-H-G14F-Q6-P10	578297
	8 mm	NPQH-H-G14F-Q8-P10	578298

Push-in bulkhead fitting NPQH-H

Connection 1	Connection 2	Type	Part no.
4 mm	4 mm	NPQH-H-Q4-E-P10	578299
6 mm	6 mm	NPQH-H-Q6-E-P10	578300
8 mm	8 mm	NPQH-H-Q8-E-P10	578301
10 mm	10 mm	NPQH-H-Q10-E-P10	578302
12 mm	12 mm	NPQH-H-Q12-E-P10	578303

Blanking plug NPQH-P

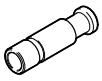

Connection 1	Connection 2	Type	Part no.
4 mm	–	NPQH-P-S4-P10	578257
6 mm	–	NPQH-P-S6-P10	578258
8 mm	–	NPQH-P-S8-P10	578259
10 mm	–	NPQH-P-S10-P10	578260
12 mm	–	NPQH-P-S12-P10	578261
14 mm	–	NPQH-P-S14-P10	578262

Plug screw NPQH-BK

Connection 1	Connection 2	Type	Part no.
M thread with sealing ring			
M5	–	NPQH-BK-M5-P10	578404
M7	–	NPQH-BK-M7-P10	578405
G-thread with sealing ring			
G⅛	–	NPQH-BK-G18-P10	578406
G¼	–	NPQH-BK-G14-P10	578407
G⅜	–	NPQH-BK-G38-P10	578408
G½	–	NPQH-BK-G12	578409

Push-in L-fitting NPQH-L
Rotatable, male thread, with external hexagon

Connection 1	Connection 2	Type	Part no.
M thread with sealing ring			
M5	4 mm	NPQH-L-M5-Q4-P10	578276
	6 mm	NPQH-L-M5-Q6-P10	578277
M7	4 mm	NPQH-L-M7-Q4-P10	578278
	6 mm	NPQH-L-M7-Q6-P10	578279
G-thread with sealing ring			
G⅛	4 mm	NPQH-L-G18-Q4-P10	578280
	6 mm	NPQH-L-G18-Q6-P10	578281
	8 mm	NPQH-L-G18-Q8-P10	578282
G¼	6 mm	NPQH-L-G14-Q6-P10	578283
	8 mm	NPQH-L-G14-Q8-P10	578284
	10 mm	NPQH-L-G14-Q10-P10	578285
	12 mm	NPQH-L-G14-Q12-P10	578286
G⅜	8 mm	NPQH-L-G38-Q8-P10	578287
	10 mm	NPQH-L-G38-Q10-P10	578288
	12 mm	NPQH-L-G38-Q12-P10	578289
	14 mm	NPQH-L-G38-Q14-P10	578290
G½	10 mm	NPQH-L-G12-Q10	578291
	12 mm	NPQH-L-G12-Q12	578292
	14 mm	NPQH-L-G12-Q14	578293

Push-in L-fitting (long) NPQH-LL
Rotatable, male thread, with external hexagon

Connection 1	Connection 2	Type	Part no.
G⅛	4 mm	NPQH-LL-G18-Q4-P10	578263
	6 mm	NPQH-LL-G18-Q6-P10	578264
	8 mm	NPQH-LL-G18-Q8-P10	578265
G¼	6 mm	NPQH-LL-G14-Q6-P10	578266
	8 mm	NPQH-LL-G14-Q8-P10	578267
	10 mm	NPQH-LL-G14-Q10-P10	578268
G⅜	10 mm	NPQH-LL-G38-Q10-P10	578269

Push-in L-connector NPQH-L

Connection 1	Connection 2	Type	Part no.
4 mm	4 mm	NPQH-L-Q4-E-P10	578270
6 mm	6 mm	NPQH-L-Q6-E-P10	578271
8 mm	8 mm	NPQH-L-Q8-E-P10	578272
10 mm	10 mm	NPQH-L-Q10-E-P10	578273
12 mm	12 mm	NPQH-L-Q12-E-P10	578274
14 mm	14 mm	NPQH-L-Q14-E-P10	578275

FESTO

Ordering

Push-in T-fitting NPQH-T
Rotatable, male thread, with external hexagon

Connection 1	Connection 2	Type	Part no.
M thread with sealing ring			
M5	4 mm	NPQH-T-M5-Q4-P10	578390
	6 mm	NPQH-T-M5-Q6-P10	578391
G thread with sealing ring			
G⅛	4 mm	NPQH-T-G18-Q4-P10	578392
	6 mm	NPQH-T-G18-Q6-P10	578393
	8 mm	NPQH-T-G18-Q8-P10	578394
G¼	6 mm	NPQH-T-G14-Q6-P10	578395
	8 mm	NPQH-T-G14-Q8-P10	578396
	10 mm	NPQH-T-G14-Q10-P10	578397
	12 mm	NPQH-T-G14-Q12-P10	578398
G⅜	8 mm	NPQH-T-G38-Q8-P10	578399
	10 mm	NPQH-T-G38-Q10-P10	578400
	12 mm	NPQH-T-G38-Q12-P10	578401
G½	10 mm	NPQH-T-G12-Q10	578402
	12 mm	NPQH-T-G12-Q12	578403

Push-in T-connector NPQH-T

Connection 1	Connection 2	Type	Part no.
4 mm	4 mm	NPQH-T-Q4-E-P10	578380
6 mm	6 mm	NPQH-T-Q6-E-P10	578381
8 mm	8 mm	NPQH-T-Q8-E-P10	578382
10 mm	10 mm	NPQH-T-Q10-E-P10	578383
12 mm	12 mm	NPQH-T-Q12-E-P10	578384
14 mm	14 mm	NPQH-T-Q14-E-P10	578385

Push-in T-connector NPQH-T

Connection 1	Connection 2	Type	Part no.
Reducing			
6 mm	4 mm	NPQH-T-Q6-Q4-P10	578386
8 mm	6 mm	NPQH-T-Q8-Q6-P10	578387
10 mm	8 mm	NPQH-T-Q10-Q8-P10	578388
12 mm	10 mm	NPQH-T-Q12-Q10-P10	578389

Push-in Y-connector NPQH-Y

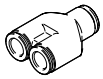

Connection 1	Connection 2	Type	Part no.
6 mm	6 mm	NPQH-Y-Q6-E-P10	578410
8 mm	8 mm	NPQH-Y-Q8-E-P10	578411
10 mm	10 mm	NPQH-Y-Q10-E-P10	578412

Push-in Y-connector NPQH-Y

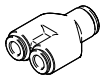

Connection 1	Connection 2	Type	Part no.
Reducing			
6 mm	4 mm	NPQH-Y-Q6-Q4-P10	578413
8 mm	6 mm	NPQH-Y-Q8-Q6-P10	578414
10 mm	8 mm	NPQH-Y-Q10-Q8-P10	578415

Push-in fittings QS, standard series

FESTO

QS-G1/4-8-I

QSF-1/8-4-B

QSL-1/8-6

QST-1/8-6

QSY-8

QSS-4

QSC-6H

- Simple and reliable connection and release
- Wide selection for maximum flexibility in standard applications
- Male or female thread with external or internal hexagon
- Resistant to pressure: economical for pneumatic installations up to 14 bar
- Selected types in accordance with ATEX directive for potentially explosive atmospheres
  ➔ **www.festo.com/en/ex**

Order code

001 002 003 004 005 006

[ ] – [ ] – [ ] – [ ] – [ ] – [ ]

Legend: [ ] Mandatory entry [ ] Optional entry

001	Type
QS	Push-in fitting/push-in connector, straight, standard series
QSF	Push-in fitting, straight, standard series
QSL	Push-in fitting/push-in connector, L-shape, standard series
QSLL	Push-in fitting, L-shape, long, standard series
QSLF	Push-in fitting, L-shape, standard series
QSLV	Push-in fitting, L-shape, standard series
QST	Push-in fitting/push-in connector, T-shape, standard series
QSTL	Push-in fitting, T-shape, standard series
QSY	Push-in fitting/push-in connector, Y-shape, standard series
QSVL	Push-in fitting, Y-shape, standard series
QSS	Push-in bulkhead connector, standard series
QSC	Blanking plug, standard series

002	Pneumatic connection 1		
M5	M thread M5	**8**	Push-in connector 8 mm
G1/8	G thread G⅛	**10**	Push-in connector 10 mm
G1/4	G thread G¼	**12**	Push-in connector 12 mm
G3/8	G thread G⅜	**14**	Push-in connector 14 mm
G1/2	G thread G½	**16**	Push-in connector 16 mm
1/8	R thread R⅛	**4**	Push-in sleeve 4 mm
1/4	R thread R¼	**6**	Push-in sleeve 6 mm
3/8	R thread R⅜	**8**	Push-in sleeve 8 mm
1/2	R thread R½	**10**	Push-in sleeve 10 mm
4	Push-in connector 4 mm	**12**	Push-in sleeve 12 mm
6	Push-in connector 6 mm		

003	Pneumatic connection 2		
4	Push-in connector 4 mm	**4**	Push-in sleeve 4 mm
6	Push-in connector 6 mm	**6**	Push-in sleeve 6 mm
8	Push-in connector 8 mm	**8**	Push-in sleeve 8 mm
10	Push-in connector 10 mm	**10**	Push-in sleeve 10 mm
12	Push-in connector 12 mm	**12**	Push-in sleeve 12 mm
16	Push-in connector 16 mm	**16**	Push-in sleeve 16 mm

004	Packaging unit
–	10 pieces/1 piece

005	Mounting method
–	Standard
I	With internal hexagon

006	Generation
–	First generation
B	Second generation

Product options

Types:
QS-V0, resistant to welding spatter
CRQS, stainless steel

Designs:
W-shape, X-shape

Packaging units:
20 pieces, 50 pieces, 100 pieces

Ordering – Product options

Configurable product

This product and all its product options can be ordered using the configurator.

The configurator can be found under Products at
➔ **www.festo.com/catalogue/...**

Enter the type or the configuration part number in the search field.

FESTO

Ordering

Push-in fitting QS, straight
Male thread with external hexagon

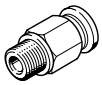

Connection 1	Connection 2	Type	Part no.
R thread			
R⅛	4 mm	QS-1/8-4	153001
	6 mm	QS-1/8-6	153002
	8 mm	QS-1/8-8	153004
	10 mm	QS-1/8-10	190643
R¼	4 mm	QS-1/4-4	190644
	6 mm	QS-1/4-6	153003
	8 mm	QS-1/4-8	153005
	10 mm	QS-1/4-10	153007
	12 mm	QS-1/4-12	164980
R⅜	6 mm	QS-3/8-6	190645
	8 mm	QS-3/8-8	153006
	10 mm	QS-3/8-10	153008
	12 mm	QS-3/8-12	153009
	16 mm	QS-3/8-16 [1]	164957
R½	10 mm	QS-1/2-10 [1]	190646
	12 mm	QS-1/2-12 [1]	153010
	16 mm	QS-1/2-16 [1]	153011

1) Packaging unit 1 piece

Push-in fitting QS, straight
Male thread with external hexagon

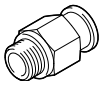

Connection 1	Connection 2	Type	Part no.
G thread with sealing ring			
G⅛	4 mm	QS-G1/8-4	186095
	6 mm	QS-G1/8-6	186096
	8 mm	QS-G1/8-8	186098
G¼	6 mm	QS-G1/4-6	186097
	8 mm	QS-G1/4-8	186099
	10 mm	QS-G1/4-10	186101
	12 mm	QS-G1/4-12	186350
G⅜	8 mm	QS-G3/8-8	186100
	10 mm	QS-G3/8-10	186102
	12 mm	QS-G3/8-12	186103
	16 mm	QS-G3/8-16 [1]	186347
G½	12 mm	QS-G1/2-12 [1]	186104
	16 mm	QS-G1/2-16 [1]	186105

1) Packaging unit 1 piece

Push-in fitting QS-...-I, straight
Male thread with internal hexagon

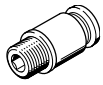

Connection 1	Connection 2	Type	Part no.
R thread			
R⅛	4 mm	QS-1/8-4-I	153012
	6 mm	QS-1/8-6-I	153013
	8 mm	QS-1/8-8-I	153015
	10 mm	QS-1/8-10-I	190647
R¼	6 mm	QS-1/4-6-I	153014
	8 mm	QS-1/4-8-I	153016
	10 mm	QS-1/4-10-I	153018
	12 mm	QS-1/4-12-I	190649
R⅜	8 mm	QS-3/8-8-I	153017
	10 mm	QS-3/8-10-I	153019
	12 mm	QS-3/8-12-I	153020
R½	10 mm	QS-1/2-10-I [1]	190648
	12 mm	QS-1/2-12-I [1]	153021
G-thread with sealing ring			
G⅛	4 mm	QS-G1/8-4-I	186106
	6 mm	QS-G1/8-6-I	186107
	8 mm	QS-G1/8-8-I	186109
	10 mm	QS-G1/8-10-I	132999
G¼	6 mm	QS-G1/4-6-I	186108
	8 mm	QS-G1/4-8-I	186110
	10 mm	QS-G1/4-10-I	186112
G⅜	8 mm	QS-G3/8-8-I	186111
	10 mm	QS-G3/8-10-I	186113
	12 mm	QS-G3/8-12-I	186114
G½	12 mm	QS-G1/2-12-I [1]	186115

1) Packaging unit 1 piece

Push-in fitting QSF, straight
Female thread with external hexagon

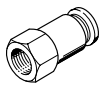

Connection 1	Connection 2	Type	Part no.
G thread			
G⅛	4 mm	QSF-1/8-4-B	153022
	6 mm	QSF-1/8-6-B	153023
	8 mm	QSF-1/8-8-B	153025
G¼	4 mm	QSF-1/4-4-B	190650
	6 mm	QSF-1/4-6-B	153024
	8 mm	QSF-1/4-8-B	153026
	10 mm	QSF-1/4-10-B	153028
	12 mm	QSF-1/4-12-B	190651
G⅜	6 mm	QSF-3/8-6-B	190652
	8 mm	QSF-3/8-8-B	153027
	10 mm	QSF-3/8-10-B	153029
	12 mm	QSF-3/8-12-B	153030
G½	12 mm	QSF-1/2-12-B [1]	190653
	16 mm	QSF-1/2-16-B [1]	190654

1) Packaging unit 1 piece

Push-in fittings QS, standard series

FESTO

Ordering

Push-in connector QS, straight

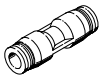

Connection 1	Connection 2	Type	Part no.
4 mm	4 mm	QS-4	153031
6 mm	6 mm	QS-6	153032
8 mm	8 mm	QS-8	153033
10 mm	10 mm	QS-10	153034
12 mm	12 mm	QS-12	153035
16 mm	16 mm	QS-16 [1]	153036
Reducing			
6 mm	4 mm	QS-6-4	153037
8 mm	4 mm	QS-8-4	130606
	6 mm	QS-8-6	153038
10 mm	6 mm	QS-10-6	130607
	8 mm	QS-10-8	153039
12 mm	8 mm	QS-12-8	130608
	10 mm	QS-12-10	153040

1) Packaging unit 1 piece

Push-in bulkhead connector QSS

Connection 1	Connection 2	Type	Part no.
4 mm	4 mm	QSS-4	153157
6 mm	6 mm	QSS-6	153158
8 mm	8 mm	QSS-8	153159
10 mm	10 mm	QSS-10	153160
12 mm	12 mm	QSS-12	153161
With fixed collar			
8 mm	8 mm	QSS-8-F	130642
10 mm	10 mm	QSS-10-F	130643
12 mm	12 mm	QSS-12-F	130644

Push-in cap QSC

Connection 1	Connection 2	Type	Part no.
4 mm	–	QSC-4	153262
6 mm	–	QSC-6	153263
8 mm	–	QSC-8	153264
10 mm	–	QSC-10	153265
12 mm	–	QSC-12	153266

Push-in connector QS-...H, straight with push-in sleeve

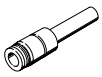

Connection 1	Connection 2	Type	Part no.
Reducing			
6 mm	4 mm	QS-6H-4	153041
8 mm	4 mm	QS-8H-4	130622
	6 mm	QS-8H-6	153042
10 mm	6 mm	QS-10H-6	130623
	8 mm	QS-10H-8	153043
12 mm	6 mm	QS-12H-6	132981
	8 mm	QS-12H-8	130624
	10 mm	QS-12H-10	153044

Blanking plug QSC-...H
Push-in sleeve

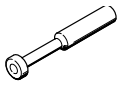

Connection 1	Connection 2	Type	Part no.
4 mm	None	QSC-4H	153267
6 mm	None	QSC-6H	153268
8 mm	None	QSC-8H	153269
10 mm	None	QSC-10H	153270
12 mm	None	QSC-12H	153271
16 mm	None	QSC-16H [1]	153272

1) Packaging unit 1 piece

Push-in L-fitting QSL, L-shape, rotatable
Male thread with external hexagon

Connection 1	Connection 2	Type	Part no.
R thread			
R⅛	4 mm	QSL-1/8-4	153045
	6 mm	QSL-1/8-6	153046
	8 mm	QSL-1/8-8	153048
	10 mm	QSL-1/8-10	190658
R¼	4 mm	QSL-1/4-4	190659
	6 mm	QSL-1/4-6	153047
	8 mm	QSL-1/4-8	153049
	10 mm	QSL-1/4-10	153051
	12 mm	QSL-1/4-12	164981
R⅜	6 mm	QSL-3/8-6	190660
	8 mm	QSL-3/8-8	153050
	10 mm	QSL-3/8-10	153052
	12 mm	QSL-3/8-12	153053
	16 mm	QSL-3/8-16 [1]	164958
R½	10 mm	QSL-1/2-10 [1]	190661
	12 mm	QSL-1/2-12 [1]	153054
	16 mm	QSL-1/2-16 [1]	153055
G thread with sealing ring			
G⅛	4 mm	QSL-G1/8-4	186116
	6 mm	QSL-G1/8-6	186117
	8 mm	QSL-G1/8-8	186119
G¼	6 mm	QSL-G1/4-6	186118
	8 mm	QSL-G1/4-8	186120
	10 mm	QSL-G1/4-10	186122
	12 mm	QSL-G1/4-12	186351
G⅜	8 mm	QSL-G3/8-8	186121
	10 mm	QSL-G3/8-10	186123
	12 mm	QSL-G3/8-12	186124
	16 mm	QSL-G3/8-16 [1]	186348
G½	12 mm	QSL-G1/2-12 [1]	186125
	16 mm	QSL-G1/2-16 [1]	186126

1) Packaging unit 1 piece

FESTO

Ordering

Push-in fitting QSLL, L-shape, long, rotatable

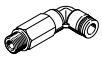

Connection 1	Connection 2	Type	Part no.
R thread (male thread with external hexagon)/push-in connector			
R⅛	4 mm	QSLL-1/8-4	153076
	6 mm	QSLL-1/8-6	153077
	8 mm	QSLL-1/8-8	153079
R¼	4 mm	QSLL-1/4-4	190662
	6 mm	QSLL-1/4-6	153078
	8 mm	QSLL-1/4-8	153080
	10 mm	QSLL-1/4-10	153082
R⅜	6 mm	QSLL-3/8-6	190663
	8 mm	QSLL-3/8-8	153081
	10 mm	QSLL-3/8-10	153083
	12 mm	QSLL-3/8-12	153084
R½	10 mm	QSLL-1/2-10 [1]	190664
	12 mm	QSLL-1/2-12 [1]	153085

1) Packaging unit 1 piece

Push-in L-fitting QSLF, L-shape, rotatable
Female thread with external hexagon

Connection 1	Connection 2	Type	Part no.
G thread			
G⅛	4 mm	QSLF-1/8-4-B	153273
	6 mm	QSLF-1/8-6-B	153274
	8 mm	QSLF-1/8-8-B	153276
G¼	6 mm	QSLF-1/4-6-B	153275
	8 mm	QSLF-1/4-8-B	153277
	10 mm	QSLF-1/4-10-B	153279
G⅜	8 mm	QSLF-3/8-8-B	153278
	10 mm	QSLF-3/8-10-B	153280

Push-in L-fitting QSLV, L-shape, rotatable
Male thread with external hexagon

Connection 1	Connection 2	Type	Part no.
M thread			
M5	6 mm	QSLV-M5-6	190666
R thread			
R⅛	4 mm	QSLV-1/8-4	153086
	6 mm	QSLV-1/8-6	153087
	8 mm	QSLV-1/8-8	153089
R¼	6 mm	QSLV-1/4-6	153088
	8 mm	QSLV-1/4-8	153090
	10 mm	QSLV-1/4-10	153092
R⅜	8 mm	QSLV-3/8-8	153091
	10 mm	QSLV-3/8-10	153093
	12 mm	QSLV-3/8-12	153094
R½	12 mm	QSLV-1/2-12 [1]	153095
	16 mm	QSLV-1/2-16 [1]	153096
G thread			
G⅛	4 mm	QSLV-G1/8-4	186137
	6 mm	QSLV-G1/8-6	186138
	8 mm	QSLV-G1/8-8	186140
G¼	6 mm	QSLV-G1/4-6	186139
	8 mm	QSLV-G1/4-8	186141
	10 mm	QSLV-G1/4-10	186143
G⅜	8 mm	QSLV-G3/8-8	186142
	10 mm	QSLV-G3/8-10	186144
	12 mm	QSLV-G3/8-12	186145
G½	12 mm	QSLV-G1/2-12 [1]	186146
	16 mm	QSLV-G1/2-16 [1]	186147

1) Packaging unit 1 piece

Push-in L-connector QSL, L-shape

Connection 1	Connection 2	Type	Part no.
4 mm	4 mm	QSL-4	153070
6 mm	6 mm	QSL-6	153071
8 mm	8 mm	QSL-8	153072
10 mm	10 mm	QSL-10	153073
12 mm	12 mm	QSL-12	153074
16 mm	16 mm	QSL-16 [1]	153075

1) Packaging unit 1 piece

Push-in L-connector QSL-...H, L-shape
with push-in sleeve

Connection 1	Connection 2	Type	Part no.
4 mm	4 mm	QSL-4H	153056
6 mm	6 mm	QSL-6H	153057
8 mm	8 mm	QSL-8H	153058
10 mm	10 mm	QSL-10H	153059
12 mm	12 mm	QSL-12H	153060
Reducing			
6 mm	4 mm	QSL-6H-4	153061
8 mm	6 mm	QSL-8H-6	153062
10 mm	6 mm	QSL-10H-8	153063
12 mm	10 mm	QSL-12H-10	153064
Long push-in sleeve			
4 mm	4 mm	QSL-4HL	153065
6 mm	6 mm	QSL-6HL	153066
8 mm	8 mm	QSL-8HL	153067
10 mm	10 mm	QSL-10HL	153068
12 mm	12 mm	QSL-12HL	153069

Push-in T-fitting QST, T-shape, rotatable
Male thread with external hexagon

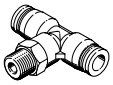

Connection 1	Connection 2	Type	Part no.
R thread			
R⅛	4 mm	QST-1/8-4	153106
	6 mm	QST-1/8-6	153107
	8 mm	QST-1/8-8	153109
	10 mm	QST-1/8-10	190667
R¼	4 mm	QST-1/4-4	190668
	6 mm	QST-1/4-6	153108
	8 mm	QST-1/4-8	153110
	10 mm	QST-1/4-10	153112
	12 mm	QST-1/4-12	190669
R⅜	6 mm	QST-3/8-6	190670
	8 mm	QST-3/8-8	153111
	10 mm	QST-3/8-10	153113
	12 mm	QST-3/8-12	153114
	16 mm	QST-3/8-16 [1]	164959
R½	10 mm	QST-1/2-10 [1]	190672
	12 mm	QST-1/2-12 [1]	153115
	16 mm	QST-1/2-16 [1]	153116

1) Packaging unit 1 piece

FESTO

Ordering

Push-in T-connector QST, T-shape

Connection 1	Connection 2	Type	Part no.
4 mm	4 mm	QST-4	153128
6 mm	6 mm	QST-6	153129
8 mm	8 mm	QST-8	153130
10 mm	10 mm	QST-10	153131
12 mm	12 mm	QST-12	153132
16 mm	16 mm	QST-16 [1]	153133
Reducing			
6 mm	4 mm	QST-6-4	153134
8 mm	4 mm	QST-8-4	130613
	6 mm	QST-8-6	153135
10 mm	6 mm	QST-10-6	130614
	8 mm	QST-10-8	153136
12 mm	8 mm	QST-12-8	130615
	10 mm	QST-12-10	153137
16 mm	12 mm	QST-16-12 [1]	130616

1) Packaging unit 1 piece

Push-in Y-connector QSY, Y-shape

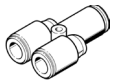

Connection 1	Connection 2	Type	Part no.
Push-in connector/push-in connector			
4 mm	4 mm	QSY-4	153148
6 mm	6 mm	QSY-6	153149
8 mm	8 mm	QSY-8	153150
10 mm	10 mm	QSY-10	153151
12 mm	12 mm	QSY-12	153152
16 mm	16 mm	QSY-16 [1]	130609
Reducing (2 reduced outlets)			
6 mm	4 mm	QSY-6-4	153153
8 mm	4 mm	QSY-8-4	130610
	6 mm	QSY-8-6	153154
10 mm	6 mm	QSY-10-6	130611
	8 mm	QSY-10-8	153155
12 mm	8 mm	QSY-12-8	130612
	10 mm	QSY-12-10	153156
16 mm	12 mm	QSY-16-12 [1]	190708

1) Packaging unit 1 piece

Push-in T-fitting QSTL, T-shape, rotatable
Male thread with external hexagon

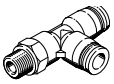

Connection 1	Connection 2	Type	Part no.
R thread			
R⅛	4 mm	QSTL-1/8-4	153117
	6 mm	QSTL-1/8-6	153118
	8 mm	QSTL-1/8-8	153120
R¼	6 mm	QSTL-1/4-6	153119
	8 mm	QSTL-1/4-8	153121
	10 mm	QSTL-1/4-10	153123
R⅜	8 mm	QSTL-3/8-8	153122
	10 mm	QSTL-3/8-10	153124
	12 mm	QSTL-3/8-12	153125
R½	12 mm	QSTL-1/2-12 [1]	153126
	16 mm	QSTL-1/2-16 [1]	153127

1) Packaging unit 1 piece

Push-in Y-fitting QSYL, Y-shape, rotatable
Male thread with external hexagon

Connection 1	Connection 2	Type	Part no.
R thread			
R⅛	4 mm	QSYL-1/8-4 [1]	153172
	6 mm	QSYL-1/8-6 [1]	153173
	8 mm	QSYL-1/8-8 [1]	153175
R¼	6 mm	QSYL-1/4-6 [1]	153174
	8 mm	QSYL-1/4-8 [1]	153176
	10 mm	QSYL-1/4-10 [1]	153178
R⅜	8 mm	QSYL-3/8-8 [1]	153177
	10 mm	QSYL-3/8-10 [1]	153179
	12 mm	QSYL-3/8-12 [1]	153180
R½	12 mm	QSYL-1/2-12 [1]	153181

1) Packaging unit 1 piece

Push-in Y-fitting QSY, Y-shape, rotatable
Male thread with external hexagon

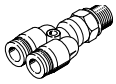

Connection 1	Connection 2	Type	Part no.
M thread with sealing ring			
M5	4 mm	QSY-M5-4	190673
	6 mm	QSY-M5-6	190674
R-thread			
R⅛	4 mm	QSY-1/8-4	153138
	6 mm	QSY-1/8-6	153139
	8 mm	QSY-1/8-8	153141
R¼	4 mm	QSY-1/4-4	190675
	6 mm	QSY-1/4-6	153140
	8 mm	QSY-1/4-8	153142
	10 mm	QSY-1/4-10	153144
R⅜	8 mm	QSY-3/8-8	153143
	10 mm	QSY-3/8-10	153145
	12 mm	QSY-3/8-12	153146
R½	12 mm	QSY-1/2-12 [1]	153147

1) Packaging unit 1 piece

Push-in fittings QSM, mini series

FESTO

QSM-G1/8-6-I

QSML-M5-6

QSMT-M5-6

QSMY-3

QSMS

- Simple and reliable connection and release
- Compact for maximum component density in confined installation spaces
- Selected types in accordance with ATEX directive for potentially explosive atmospheres
  → **www.festo.com/en/ex**

Order code

001 002 003 004 005

[ ] – [ ] – [ ] – [ ] – [ ]

Legend: [ ] Mandatory entry [ ] Optional entry

001	Type
QSM	Push-in fitting/push-in connector, straight, mini series
QSML	Push-in fitting/push-in connector, L-shape, mini series
QSMT	Push-in connector, T-shape, mini series
QSMY	Push-in connector, Y-shape, mini series
QSMS	Push-in bulkhead connector

002	Pneumatic connection 1		
M3	M thread M3	**4**	Push-in connector 4 mm
M5	M thread M5	**6**	Push-in connector 6 mm
M7	M thread M7	**8**	Push-in connector 8 mm
G1/8	G thread G⅛	**10**	Push-in connector 10 mm
1/8	R thread R⅛	**12**	Push-in connector 12 mm

003	Pneumatic connection 2
–	Same size as connection 1
3	Push-in connector 3 mm
4	Push-in connector 4 mm
6	Push-in connector 6 mm

004	Packaging unit
–	10 pieces

005	Mounting method
–	Standard
I	With internal hexagon

Product options

Push-in connector 2 mm
Packaging unit 100 pieces

Ordering – Product options

Configurable product

This product and all its product options can be ordered using the configurator.

The configurator can be found under Products at
→ **www.festo.com/catalogue/...**

Enter the type or the configuration part number in the search field.

FESTO

Ordering

Push-in fitting QSM, straight
Male thread with external hexagon

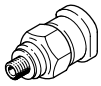

Connection 1	Connection 2	Type	Part no.
M thread with sealing ring			
M3	3 mm	QSM-M3-3	153301
	4 mm	QSM-M3-4	153303
M5	3 mm	QSM-M5-3	153302
	4 mm	QSM-M5-4	153304
	6 mm	QSM-M5-6	153306
M6	6 mm	QSM-M6-6 [1]	132600
R thread			
R⅛	4 mm	QSM-1/8-4	153305
	6 mm	QSM-1/8-6	153307
G thread with sealing ring			
G⅛	4 mm	QSM-G1/8-4	186264
	6 mm	QSM-G1/8-6	186265

1) Packaging unit 1 piece

Push-in connector QSM-...-I, straight
Male thread with internal hexagon

Connection 1	Connection 2	Type	Part no.
M thread with sealing ring			
M3	3 mm	QSM-M3-3-I	153312
	4 mm	QSM-M3-4-I	153314
M5	3 mm	QSM-M5-3-I	153313
	4 mm	QSM-M5-4-I	153315
	6 mm	QSM-M5-6-I	153317
M7	4 mm	QSM-M7-4-I	153319
	6 mm	QSM-M7-6-I	153321
R-thread			
R⅛	4 mm	QSM-1/8-4-I	153316
	6 mm	QSM-1/8-6-I	153318
G thread with sealing ring			
G⅛	4 mm	QSM-G1/8-4-I	186266
	6 mm	QSM-G1/8-6-I	186267

Push-in connector QSM, straight

Connection 1	Connection 2	Type	Part no.
3 mm	3 mm	QSM-3	153323
4 mm	4 mm	QSM-4	153324
6 mm	6 mm	QSM-6	153325
Reducing			
4 mm	3 mm	QSM-4-3	153326
6 mm	4 mm	QSM-6-4	153327

Push-in bulkhead connector QSMS

Connection 1	Connection 2	Type	Part no.
3 mm	3 mm	QSMS-3	153375
4 mm	4 mm	QSMS-4	153376
6 mm	6 mm	QSMS-6	153377

Push-in connector QSM-...H
with push-in sleeve

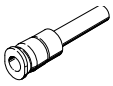

Connection 1	Connection 2	Type	Part no.
4 mm	3 mm	QSM-4H-3	153328
6 mm	4 mm	QSM-6H-4	153329

Push-in fitting QSML, L-shape, rotatable
Male thread with external hexagon

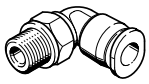

Connection 1	Connection 2	Type	Part no.
M thread with sealing ring			
M3	3 mm	QSML-M3-3	153330
	4 mm	QSML-M3-4	153332
M5	3 mm	QSML-M5-3	153331
	4 mm	QSML-M5-4	153333
	6 mm	QSML-M5-6	153335
M7	4 mm	QSML-M7-4	186352
	6 mm	QSML-M7-6	186353
R thread			
R⅛	4 mm	QSML-1/8-4	153334
	6 mm	QSML-1/8-6	153336
G thread with sealing ring			
G⅛	4 mm	QSML-G1/8-4	186268
	6 mm	QSML-G1/8-6	186269

Push-in L-connector QSML, L-shape

Connection 1	Connection 2	Type	Part no.
3 mm	3 mm	QSML-3	153343
4 mm	4 mm	QSML-4	153344
6 mm	6 mm	QSML-6	153345

Push-in L-connector QSML-...H, L-shape
with push-in sleeve

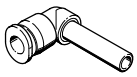

Connection 1	Connection 2	Type	Part no.
3 mm	3 mm	QSML-3H	153346
4 mm	4 mm	QSML-4H	153347
6 mm	6 mm	QSML-6H	153348
Reducing			
4 mm	3 mm	QSML-4H-3	153349
6 mm	4 mm	QSML-6H-4	153350

Push-in T-connector QSMT, T-shape

Connection 1	Connection 2	Type	Part no.
3 mm	3 mm	QSMT-3	153365
4 mm	4 mm	QSMT-4	153366
6 mm	6 mm	QSMT-6	153367
Reducing			
4 mm	3 mm	QSMT-4-3	153368
6 mm	4 mm	QSMT-6-4	153369

Push-in Y-connector QSMY, Y-shape

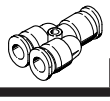

Connection 1	Connection 2	Type	Part no.
Push-in connector/push-in connector			
3 mm	3 mm	QSMY-3	153370
4 mm	4 mm	QSMY-4	153371
6 mm	6 mm	QSMY-6	153372
Reducing			
4 mm	3 mm	QSMY-4-3	153373
6 mm	4 mm	QSMY-6-4	153374

Threaded fittings NPFC

FESTO

NPFC-S

NPFC-R

NPFC-E1

NPFC-D

NPFC-L

NPFC-T

NPFC-X

NPFC-Y

- Nickel-plated brass
- Resistant to mechanical loads
- For service units, control cabinet construction or the easy installation of pneumatic controllers

Order code

001	002	003	004	005	006	007
NPFC	–	–		–	–	–

Legend: Mandatory entry; Optional entry

001	Type
NPFC	Threaded fitting

002	Design
S	Sleeve, straight
R	Reducing sleeve, straight
E...	Extension, straight, length 1 ... length 4
D	Double nipple, male thread/male thread
R	Reducing nipple
L	Fitting, L-shape
T	Fitting, T-shape
Y	Fitting, Y-shape
x	Fitting, X-shape

003	Number of threads
–	1x available
2	2x available
3	3x available
4	4x available

004	Pneumatic connection 1		
M5	M thread M5	**G1**	G thread G1
M7	M thread M7	**R18**	R thread R⅛
G18	G thread G⅛	**R14**	R thread R¼
G14	G thread G¼	**R38**	R thread R⅜
G38	G thread G⅜	**R12**	R thread R½
G12	G thread G½	**R34**	R thread R¾
G34	G thread G¾	**R1**	R thread R1

005	Pneumatic connection 2		
M5	M thread M5	**R18**	R thread R⅛
G18	G thread G⅛	**R14**	R thread R¼
G14	G thread G¼	**R38**	R thread R⅜
G38	G thread G⅜	**R12**	R thread R½
G12	G thread G½	**R34**	R thread R¾
G34	G thread G¾	**R1**	R thread R1

006	Thread type
F	With female thread
M	With male thread

007	Packaging unit
–	10 pieces

FESTO

Ordering

Sleeve NPFC-S, straight
Female thread

Connection 1	Connection 2	Type	Part no.
M thread			
M5	M5	NPFC-S-2M5-F	8030290
G-thread			
G⅛	G⅛	NPFC-S-2G18-F	8030291
G¼	G¼	NPFC-S-2G14-F	8030292
G⅜	G⅜	NPFC-S-2G38-F	8030293
G½	G½	NPFC-S-2G12-F	8030294
G¾	G¾	NPFC-S-2G34-F	8030295

Reducing sleeve NPFC-R, straight
Female thread

Connection 1	Connection 2	Type	Part no.
G⅛	G⅜	NPFC-R-G38-G18-F	8030296
G½	G¾	NPFC-R-G34-G12-F	8030297

Extension NPFC-E..., straight
Male thread/female thread

Connection 1	Connection 2	Type	Part No.
Length 1			
G⅛	G⅛	NPFC-E1-2G18-FM	8030298
G¼	G¼	NPFC-E1-2G14-FM	8030299
G⅜	G⅜	NPFC-E1-2G38-FM	8030300
G½	G½	NPFC-E1-2G12-FM	8030301
Length 2			
G⅛	G⅛	NPFC-E2-2G18-FM	8030302
G¼	G¼	NPFC-E2-2G14-FM	8030303
Length 3			
G⅛	G⅛	NPFC-E3-2G18-FM	8030304
G¼	G¼	NPFC-E3-2G14-FM	8030305
Length 4			
G⅛	G⅛	NPFC-E4-2G18-FM	8030306

Double nipple NPFC-D, straight
Male thread

Connection 1	Connection 2	Type	Part No.
M thread			
M5	M5	NPFC-D-2M5-M	8030267
M7	G⅛	NPFC-D-M7-G18-M	8030268
G thread			
G⅛	G⅛	NPFC-D-2G18-M	8030269
G⅛	G¼	NPFC-D-G18-G14-M	8030270
G⅛	G⅜	NPFC-D-G18-G38-M	8030271
G¼	G¼	NPFC-D-2G14-M	8030272
G¼	G⅜	NPFC-D-G14-G38-M	8030273
G¼	G½	NPFC-D-G14-G12-M	8030274
G⅜	G⅜	NPFC-D-2G38-M	8030275
G⅜	G½	NPFC-D-G38-G12-M	8030276
G½	G½	NPFC-D-2G12-M	8030277
R thread			
R⅛	R⅛	NPFC-D-2R18-M	8030278
R⅛	R¼	NPFC-D-R18-R14-M	8030279
R⅛	R⅜	NPFC-D-R18-R38-M	8030280
R¼	R¼	NPFC-D-2R14-M	8030281
R¼	R⅜	NPFC-D-R14-R38-M	8030282
R¼	R½	NPFC-D-R14-R12-M	8030283
R⅜	R⅜	NPFC-D-2R38-M	8030284
R⅜	R½	NPFC-D-R38-R12-M	8030285
R½	R½	NPFC-D-2R12-M	8030286
R½	R¾	NPFC-D-R12-R34-M	8030287
R¾	R¾	NPFC-D-2R34-M	8030288
R1	R1	NPFC-D-2R1-M	8030289

Reducing nipple NPFC-R

Connection 1	Connection 2	Type	Part No.
Female thread/male thread			
M5	G⅛	NPFC-R-G18-M5-FM	8030314
G⅛	G¼	NPFC-R-G14-G18-FM	8030315
G⅜	G⅜	NPFC-R-G38-G18-FM	8030316
G½	G⅜	NPFC-R-G38-G14-FM	8030317
G¾	G⅜	NPFC-R-G12-G38-FM	8030318
Male thread/female thread			
G⅛	M5	NPFC-R-G18-M5-MF	8030307
G¼	G⅛	NPFC-R-G14-G18-MF	8030308
G⅜	G⅛	NPFC-R-G38-G18-MF	8030309
G⅜	G¼	NPFC-R-G38-G14-MF	8030310
G½	G¼	NPFC-R-G12-G14-MF	8030311
G½	G⅜	NPFC-R-G12-G38-MF	8030312
G¾	G½	NPFC-R-G34-G12-MF	8030313

FESTO

Ordering

Elbow fitting NPFC-L, L-shape

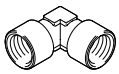

Connection 1	Connection 2	Type	Part No.
Female thread/female thread			
M5	M5	NPFC-L-2M5-F	8030208
G⅛	G⅛	NPFC-L-2G18-F	8030209
G¼	G¼	NPFC-L-2G14-F	8030210
G⅜	G⅜	NPFC-L-2G38-F	8030211
G½	G½	NPFC-L-2G12-F	8030212
G¾	G¾	NPFC-L-2G34-F	8030213
G1	G1	NPFC-L-2G1-F	8030214
Male thread/female thread			
M5	M5	NPFC-L-2M5-MF	8030215
R⅛	G⅛	NPFC-L-R18-G18-MF	8030216
R¼	G¼	NPFC-L-R14-G14-MF	8030217
R⅜	G⅜	NPFC-L-R38-G38-MF	8030218
R½	G½	NPFC-L-R12-G12-MF	8030219
R¾	G¾	NPFC-L-R34-G34-MF	8030220
R1	G1	NPFC-L-R1-G1-MF	8030221
Male thread/male thread			
M5	M5	NPFC-L-2M5-M	8030222
R⅛	R⅛	NPFC-L-2R18-M	8030223
R¼	R¼	NPFC-L-2R14-M	8030224
R⅜	R⅜	NPFC-L-2R38-M	8030225
R½	R½	NPFC-L-2R12-M	8030226
R¾	R¾	NPFC-L-2R34-M	8030227

T-fitting NPFC-T, T-shape

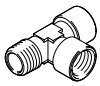

Connection 1	Connection 2	Type	Part No.
Female thread/female thread/female thread			
G⅛	G⅛	NPFC-T-3G18-F	8030235
G¼	G¼	NPFC-T-3G14-F	8030236
G⅜	G⅜	NPFC-T-3G38-F	8030237
G½	G½	NPFC-T-3G12-F	8030238
G¾	G¾	NPFC-T-3G34-F	8030239
G1	G1	NPFC-T-3G1-F	8030240
Female thread/male thread/female thread			
M5	M5	NPFC-T-3M5-FMF	8030245
G⅛	R⅛	NPFC-T-2G18-R18-FMF	8030246
G¼	R¼	NPFC-T-2G14-R14-FMF	8030247
G⅜	R⅜	NPFC-T-2G38-R38-FMF	8030248
G½	R½	NPFC-T-2G12-R12-FMF	8030249
G¾	R¾	NPFC-T-2G34-R34-FMF	8030250
G1	R1	NPFC-T-2G1-R1-FMF	8030251
Female thread/male thread/male thread			
G⅛	R⅛	NPFC-T-G18-2R18-FMM	8030255
G¼	R¼	NPFC-T-G14-2R14-FMM	8030256
G⅜	R⅜	NPFC-T-G38-2R38-FMM	8030257
G½	R½	NPFC-T-G12-2R12-FMM	8030258

T-fitting NPFC-T

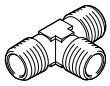

Connection 1	Connection 2	Type	Part no.
Male thread/male thread/male thread			
R¼	R¼	NPFC-T-3R14-M	8030252
R⅜	R⅜	NPFC-T-3R38-M	8030253
R½	R½	NPFC-T-3R12-M	8030254
Male thread/male thread/female thread			
R⅛	G⅛	NPFC-T-2R18-G18-MMF	8030259
R¼	G¼	NPFC-T-2R14-G14-MMF	8030260
R½	G½	NPFC-T-2R12-G12-MMF	8030261
Male thread/female thread/female thread			
R⅛	G⅛	NPFC-T-R18-2G18-MFF	8030241
R¼	G¼	NPFC-T-R14-2G14-MFF	8030242
R⅜	G⅜	NPFC-T-R38-2G38-MFF	8030243
R½	G½	NPFC-T-R12-2G12-MFF	8030244

Fitting NPFC-Y, Y-shape

Connection 1	Connection 2	Type	Part no.
Female thread/female thread/female thread			
G¼	G¼	NPFC-Y-3G14-F	8030228
G⅜	G⅜	NPFC-Y-3G38-F	8030229
G½	G½	NPFC-Y-3G12-F	8030230
Male thread/female thread/female thread			
R⅛	G⅛	NPFC-Y-R18-2G18-MFF	8030231
R¼	G¼	NPFC-Y-R14-2G14-MFF	8030232
R⅜	G⅜	NPFC-Y-R38-2G38-MFF	8030233
R½	G½	NPFC-Y-R12-2G12-MFF	8030234

Fitting NPFC-X, X-shape

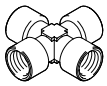

Connection 1	Connection 2	Type	Part no.
Female thread/female thread/female thread/female thread			
G¼	G¼	NPFC-X-4G14-F	8030262
G⅜	G⅜	NPFC-X-4G38-F	8030263
G½	G½	NPFC-X-4G12-F	8030264
Male thread/female thread/female thread/female thread			
G¼	R¼	NPFC-X-R14-3G14-MFFF	8030265
G½	R½	NPFC-X-R12-3G12-MFFF	8030266

Blanking plugs B-...

FESTO

B-M3-S9

B-M5

B

- With sealing ring
- High-alloy stainless steel, aluminium, steel
- M thread, G thread

Order code

001	002	003	004
B	–		–

Legend: Mandatory entry; Optional entry

001	Type
B	Blanking plug

002	Pneumatic connection
M3	M thread M3
M5	M thread M5
1/8	G thread G⅛
1/4	G thread G¼
3/4	G thread G¾
1	G thread G1

003	Version
–	Standard
S9	Corrosion- and acid-resistant version

004	Generation
–	First generation
B	Second generation

Ordering

Blanking plug B, with sealing ring

Pneumatic connection	Material	Type	Part no.	PU[1]
M thread				
M3	High-alloy stainless steel	B-M3-S9	30979	10
M5	Aluminium	B-M5	3843	10
M5	Steel	B-M5-B	174308	10
M7		B-M7	174309	10
G-thread				
G⅛	Steel	B-1/8	3568	10
G¼		B-1/4	3569	10
G⅜		B-3/8	3570	10
G½		B-1/2	3571	10
G¾		B-3/4	3572	1
G1		B-1	5763	1

1) Packaging unit quantity.

Quick coupling sockets/plugs NPHS, KD/KS

FESTO

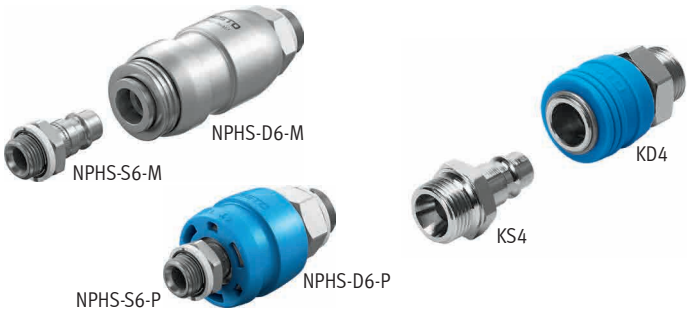

Safety coupling NPHS
- Certified by the IFA (German Institute for Occupational Safety and Health)
- Releasing sleeve made of metal or polymer
- Shut-off at one end

Plug-in coupling KD4/KS4
- For standard applications, without safety function
- Housing made from nickel-plated brass
- Releasing sleeve made from polymer
- Shut-off at one end

Order code – Safety coupling NPHS

001		002	003		004		005	006
NPHS	–		6	–		–		

001	Type
NPHS	Safety coupling

002	Coupling element
D	Quick coupling socket
S	Quick coupling plug

003	Coupling size
6	Size 6

004	Releasing sleeve version
M	Metal
P	Polymer

005	Pneumatic connection 1
G18	G⅛
G14	G¼
G38	G⅜
G12	G½

006	Thread type connection 1
–	Male thread
F	Female thread

Order code – Plug-in coupling KD/KS

001	002		003		004
	4	–		–	A

001	Type
KD	Plug-in coupling with quick coupling socket
KS	Plug-in coupling with quick coupling plug

002	Coupling size
4	Size 4

003	Pneumatic connection 1
1/4	G¼
3/8	G⅜
1/2	G½

004	Thread type connection 1
A	Male thread

Legend: Mandatory entry Optional entry

Product options

Pneumatic connection 1:
- Barbed fitting
- Female thread
- Quick connector with union nut
- Bulkhead quick connector with union nut

Ordering – Product options

Configurable product

This product and all its product options can be ordered using the configurator.

The configurator can be found under Products at
➔ **www.festo.com/catalogue/...**

Enter the type or the configuration part number in the search field.

FESTO

Ordering – Quick coupling socket/plug NPHS

Quick coupling socket/plug combination NPHS – 004 Metal releasing sleeve

			Quick coupling socket NPHS-D6-M			
		Type	–	NPHS-D6-M-G14	NPHS-D6-M-G38	NPHS-D6-M-G12
		Part no.	–	8059275	8059276	8059277
			Male thread G⅛	Male thread G¼	Male thread G⅜	Male thread G½
			Standard nominal flow rate qnN[1] for quick coupling socket/plug combination			
Quick coupling plug NPHS-S6	Male thread G¼	NPHS-S6-M-G14	–	1833 l/min	2100 l/min	2100 l/min
		8059258				
	Male thread G⅜	NPHS-S6-M-G38	–	1800 l/min	2050 l/min	2050 l/min
		8059259				
	Male thread G½	NPHS-S6-M-G12	–	1750 l/min	2000 l/min	2000 l/min
		8059260				

1) Measured at p1 = 6 bar and Δp = 1 bar

Quick coupling socket/plug combination NPHS – 004 Polymer releasing sleeve

			Quick coupling socket NPHS-D6-P			
		Type	NPHS-D6-P-G18	NPHS-D6-P-G14	NPHS-D6-P-G38	NPHS-D6-P -G12
		Part no.	8059266	8059267	8059268	8059269
			Male thread G⅛	v G¼	Male thread G⅜	Male thread G½
			Standard nominal flow rate qnN[1] for quick coupling socket/plug combination			
Quick coupling plug NPHS-S6	Male thread G⅛	NPHS-S6-M-G18	875 l/min	1183 l/min	1216 l/min	1233 l/min
		8059257				
	Male thread G¼	NPHS-S6-M-G14	1038 l/min	1916 l/min	2033 l/min	2016 l/min
		8059258				
	Male thread G⅜	NPHS-S6-M-G38	1038 l/min	1883 l/min	2033 l/min	1983 l/min
		8059259				
	Male thread G½	NPHS-S6-M-G12	1002 l/min	1883 l/min	1966 l/min	1950 l/min
		8059260				
Quick coupling plug NPHS-S6	Female thread G¼	NPHS-S6-M-G14F	1002 l/min	1883 l/min	1950 l/min	1916 l/min
		8059262				
	Female thread G⅜	NPHS-S6-M-G38F	1050 l/min	1966 l/min	2083 l/min	2016 l/min
		8059263				
	Female thread G½	NPHS-S6-M-G12F	1038 l/min	1883 l/min	2000 l/min	1983 l/min
		8059264				

1) Measured at p1 = 6 bar and Δp = 1 bar

Bestellung – Kupplungsdose/-stecker KD/KS

Quick coupling socket/plug combination KD4/ KS4

			Quick coupling socket KD4			
		Type	–	KD4-1/4-A	KD4-3/8-A	KD4-1/2-A
		Part no.	–	2143	2144	2145
			Male thread G⅛	Male thread G¼	Male thread G⅜	Male thread G½
			Standard nominal flow rate qnN[1] for quick coupling socket/plug combination			
Quick coupling plug KS4	Male thread G¼	KS4-1/4-A	–	1260 l/min	1242 l/min	1296 l/min
		2154				
	Male thread G⅜	KS4-3/8-A	–	1283 l/min	1274 l/min	1319 l/min
		2155				
	Male thread G½	KS4-1/2-A	–	1283 l/min	1260 l/min	1301 l/min
		531676				

1) Measured at p1 = 6 bar and Δp = 1 bar

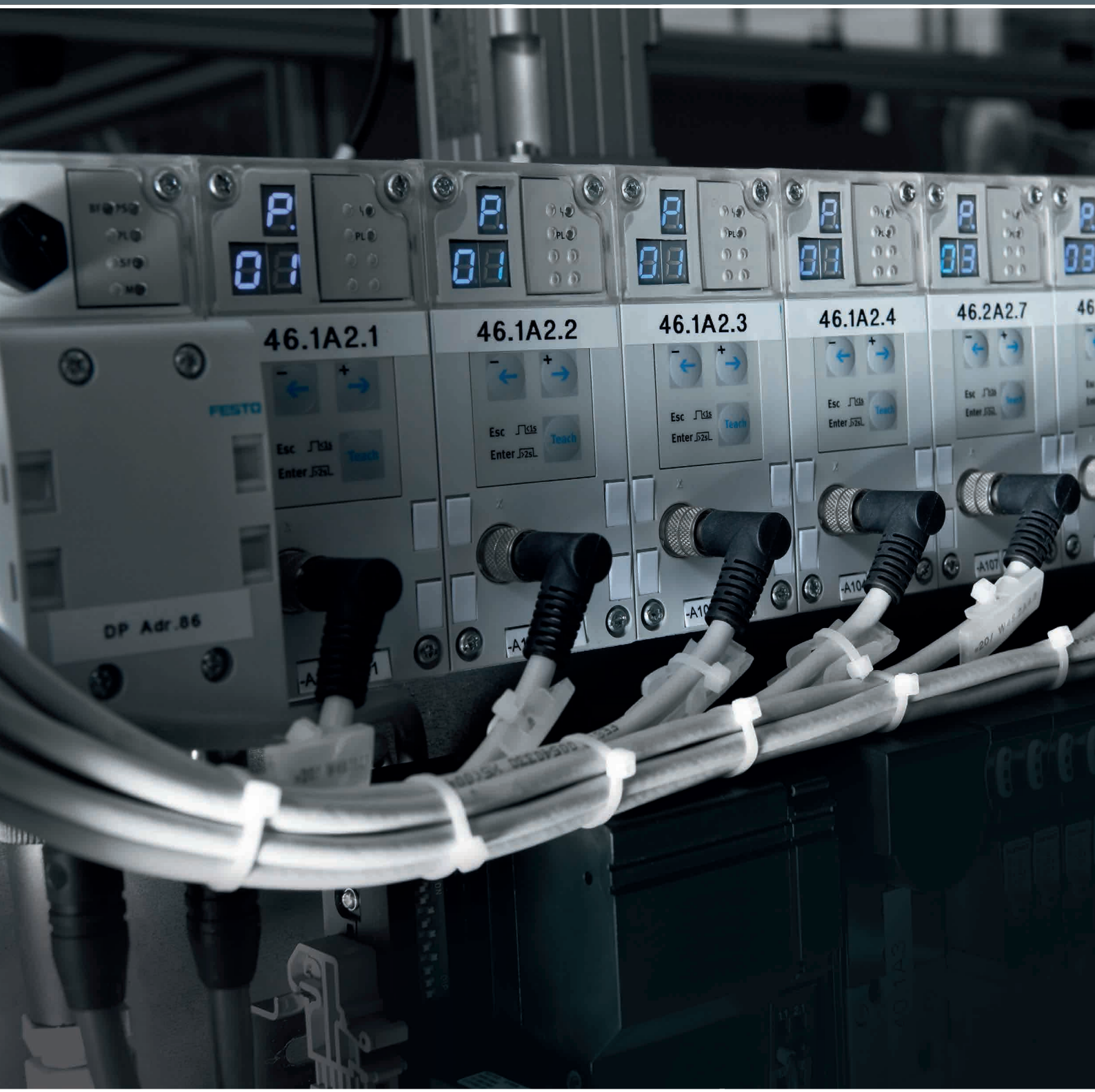

Electrical connection technology

12

Highlights

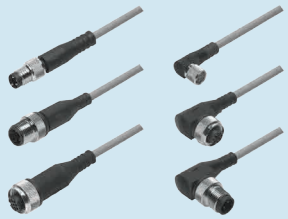

NEBU

Connecting cables

- The modular cable system with unlimited combination options of plugs, plug sockets, cable lengths and qualities
- Adapted to all devices with M8 and M12 plugs
- Cable length 0.1 … 30 m

Page 230

Contents

Product overview 227
Connecting cables NEBU, universal: overview 229
Connecting cables NEBU, universal 230
Connecting cables NEBM 231

FESTO

Software tool

Configurator	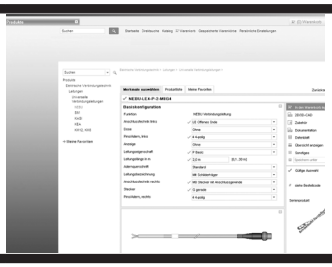	Design a product with numerous features reliably and quickly with the help of the configurator. Select all the required product features step by step. The use of logic checks ensures that only correct configurations are available for selection.	The configurator is part of the electronic catalogue and is not available as a separate software program.

Universal connecting cables

	 Connecting cables **NEBU**
Electrical connection	Socket: straight, angled, rotatable, plug: straight, angled, M5x0.5, M8x1, M12x1, 3-pin, 4-pin, 5-pin, 8-pin, rotatable thread, open end
Cable length	0.1 … 30 m
Description	• Designs for static, standard, energy chain and robot applications • Designs with switching status indication • Designs for connecting sensors and actuators
➔ Page/online	**230**

Connecting cables for control systems

	 Connecting cables NEBC
Electrical connection	Straight plug, socket, M12.x, Sub-D, 5-pin, 9-pin, 25-pin, square design/angled, Sub-D/Sub-D
Cable length	0.25 … 20 m
Description	• For I/O interface • For connecting motor controller CMMS-ST to any control system
➔ Page/online	nebc

Connecting cables for motors

	 Encoder cables **NEBM**
Electrical connection	Connection technology left: M12, A-coded, M16, M23, M40, Sub-D, ITT M3, connection technology right: open end, M12, A-coded, Sub-D
Cable length	1 … 25 m
Description	• For servo motor EMMS-AS and stepper motor EMMS-ST • Suitable for use with energy chains
➔ Page/online	**231**

FESTO

Connecting cables for valves

	Plug sockets with cable KMEB-1, KMEB-2, KMEB-3	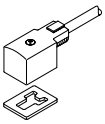 Plug sockets with cable KMF	Connecting cables NEBV-H1, NEBV-M8
Electrical connection	2-pin, 3-pin, 4-pin, 5-pin, angled socket, type C, to DIN EN 175301-803	Socket	M8x1, socket, straight socket, M12, 8-pin, straight plug, M12, 4-pin, 2-pin, angled socket/straight plug, angled socket/cable, straight socket/straight plug, M8x1/M8x1, M12x1/M12x1, 4-pin/3-pin, 8-pin/4-pin, 4-pin/2-wire, socket/plug/plug, M12x1/M12x1/M12x1, 8-pin/4-pin/4-pin
Cable length	0.5 … 10 m	2.5 … 10 m	0.5 … 10 m
Description	• For valves with EB solenoid coil: CPE18, CPE24, MEBH, MOEBH, JMEBH, JMEBDH, JMN2DH • Polyvinyl chloride or polyurethane cable • Mounting via central screw	• For valves with F solenoid coil: MFH, MOFH, JMFH, JMFDH, NVF3, MUFH • Mounting via central screw • Polyvinyl chloride cable • Temperature range –20 … +80 °C	• Connecting cable for valves with ZC solenoid coils (CPE10, CPE14), for valves VUVG • Pre-assembled
➔ Page/online	kmeb-1	kmf	nebv

Plug connectors for control systems

	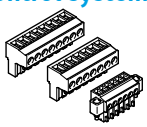 Plug assortments NEKM	Plugs NEFC-S1G25
Electrical connection	2 … 9-pin, screw connector	
Connection cross section	0.2 … 2.5 mm²	
Degree of protection		
Description	• For motor controller CMMS-ST, CMMO-ST, CMMP-AS	• 25-pin sub-D plug • Each wire can be individually assembled using screw terminals
➔ Page/online	nekm	nefc

Plug connectors for valves

	Plug sockets MSSD
Electrical connection	3-pin, 4-pin, angled socket, type A, type B, type C, to DIN EN 175301-803, to DIN EN 61984, square design
Connection cross section	0.25 … 1.5 mm²
Degree of protection	IP50, IP65, IP67, in assembled state, to IEC 60529
Description	• For valves with F, D, N1, V, E, EB, N2, Y, Z, ZB, ZC, MD-2 and MH-2 solenoid coils • For connecting individual valves • Cable connection using clamping screws, insulation displacement technology or push-in connector • Optionally with LED display
➔ Page/online	mssd

Connecting cables NEBU, universal: overview

The configurable connecting cables offer unlimited combinations in terms of plug sockets, cable lengths, cable qualities and plugs. They match all devices with M8 and M12 plugs such as proximity sensors, position transmitters, pressure and flow sensors, optical and inductive sensors as well as individual valves. The cable lengths can be freely selected between 0.1 and 30 m. The ends and middle pieces can also be freely selected for maximum customisation.

Basic

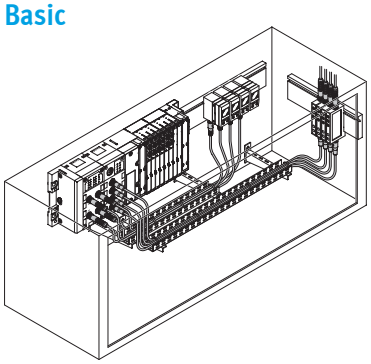

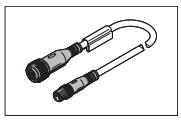

Applications
Static installation, no or small mechanical load

Properties of basic cables
Price-optimised cable for simple, mainly static applications

Standard

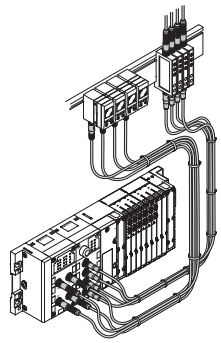

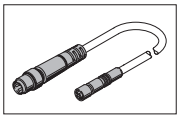

Applications
Low to average mechanical load, energy chains with large radius ≥ 75 mm

Properties of standard cables
Good oil resistance, good bending properties, suitable for use with energy chains

Energy chain

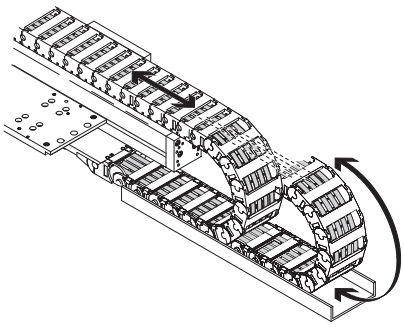

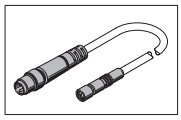

Applications
Energy chain applications involve high mechanical loads, particularly if very small radii are required.

Properties of cables suitable for use with energy chains
Very good oil resistance, very good bending properties, highly suitable for energy chains, halogen-free

Robot

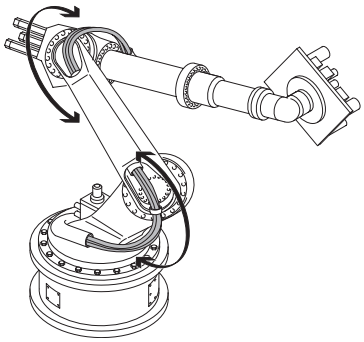

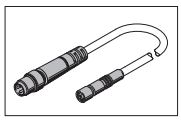

Applications
Robot applications involve high mechanical loads that are primarily caused by torsion.

Properties of robotics cables
Very good oil resistance, very good bending properties, suitable for use with energy chains, halogen-free

The technical data as well as an overview of the range of options for the connecting cables NEBU can be found online ➔ nebu

Connecting cables NEBU, universal

FESTO

- Plug socket with cable for connecting inputs/outputs
- Pre-assembled at both ends

Order code – Basic design

001		002	003		004		005		006		007		008	009
NEBU	–			–		–	K	–		–		–		

Legend: Mandatory entry Optional entry

001	Type
NEBU	Connecting cable, universal

002	Connection technology, left
M8	Socket with connecting thread M8
M12	Socket with connecting thread M12

003	Connection technology version, left
G3	Straight, 3-pin
G5	Straight, 5-pin
W3	Angled, 3-pin

004	Display
–	Without LED

005	Cable characteristic
K	Standard

006	Cable length
0,5	0.5 m
1	1 m
2,5	2.5 m
5	5 m
10	10 m

007	Cable designation
–	With inscription label holder

008	Connection technology, right
M8	Plug with connecting thread M8
LE	Open cable end

009	Connection technology version, right
3	Open cable end, 3-wire
4	Open cable end, 4-wire
G3	Straight, 3-pin

Product options

Connection technology version
- Rotatable

Cable characteristics
- Suitable for use with energy chains
- Suitable for robot applications

- With LED display

Ordering – Product options

Configurable product

This product and all its product options can be ordered using the configurator.

The configurator can be found under Products at
➔ **www.festo.com/catalogue/...**

Enter the type or the configuration part number in the search field.

Ordering – Basic design

Connecting cables, M8, 3-pin		
Cable length	Type	Part no.
Straight socket, 3-pin, M8 – straight plug, 3-pin, M8		
0.5 m	NEBU-M8G3-K-0.5-M8G3	541346
1 m	NEBU-M8G3-K-1-M8G3	541347
2.5 m	NEBU-M8G3-K-2.5-M8G3	541348
5 m	NEBU-M8G3-K-5-M8G3	541349
Dose, gerade, 3-polig, M8 – offenes Kabelende		
10 m	NEBU-M8G3-K-10-LE3	541332
Angled socket, 3-pin, M8 – open cable end, 3-wire		
10 m	NEBU-M8W3-K-10-LE3	541335

Connecting cables, M8, 3-pin		
Cable length	Type	Part no.
Straight socket, 5-pin, M12 – open cable end, 3-wire		
2.5 m	NEBU-M12G5-K-2.5-LE3	541363
5 m	NEBU-M12G5-K-5-LE3	541364
Straight socket, 5-pin, M12 – open cable end, 4-wire		
2.5 m	NEBU-M12G5-K-2.5-LE4	550326
5 m	NEBU-M12G5-K-5-LE4	541328

Connecting cables NEBM

FESTO

NEBM-M16G8-E-...-Q7-LE8

NEBM-S1G9-E-2.5-N-S1G9

- For servo motor EMMS-AS and stepper motor EMMS-ST
- Suitable for use with energy chains

Order code – Basic design

001		002	003	004		005		006		007		008	009
NEBM	–				–	E	–		–		–		

Legend: Mandatory entry; Optional entry

001	Type
NEBM	Connecting cables for motors

002	Connection technology, left
M12	M12, A-coded
M16	M16
S1	Sub-D

003	Plug socket
G	Straight
W	Angled

004	Pins/wires, left
8	8
9	9
15	15

005	Cable characteristic
E	Suitable for use with energy chains

006	Cable length
1,5	1.5 m
2,5	2.5 m
5	5 m
7	7 m
7,5	7.5 m
10	10 m
15	15 m

007	Wire cross section
–	Standard
Q5	0.34 mm²
Q7	0.75 mm²
Q9	1.5 mm²
N	

008	Connection technology, right
LE	Open end
S1G	Sub-D, straight

009	Pins/wires, left
6	6
8	8
9	9
15	15

Product options

Connection technologies
– M23, M40, ITT M3

Cable lengths
– 1.94 m, 2.23 m

Cable characteristics
– Suitable for robot applications

Ordering – Product options

Configurable product

This product and all its product options can be ordered using the configurator.

The configurator can be found under Products at
➔ **www.festo.com/catalogue/...**

Enter the type or the configuration part number in the search field.

Connecting cables NEBM

FESTO

Ordering – Basic design

Encoder cable for motor controller CMMS-ST		
Cable length	Type	Part no.
Straight plug, min.bending radius: 51 mm, ambient temperature: –40 ... +70 °C		
5 m	NEBM-M12G8-E-5-S1G9	550748
10 m	NEBM-M12G8-E-10-S1G9	550749
15 m	NEBM-M12G8-E-15-S1G9	550750

Motor cable for motor controller CMMO-ST, stepper motors EMMS-ST-28		
Cable length	Type	Part no.
Straight plug, min.bending radius: 62 mm, ambient temperature: –40 ... +80 °C		
1.5 m	NEBM-M12G8-E-1.5-Q5-LE6	1449600
2.5 m	NEBM-M12G8-E-2.5-Q5-LE6	1449601
5 m	NEBM-M12G8-E-5-Q5-LE6	1449602
7 m	NEBM-M12G8-E-7-Q5-LE6	1449603
10 m	NEBM-M12G8-E-10-Q5-LE6	1449604

Motor cable for motor controller CMMO-ST, CMMS-ST, CMMO-ST		
Cable length	Type	Part no.
Straight plug, min.bending radius: 62 mm, ambient temperature: –40 ... +80 °C		
1.5 m	NEBM-S1G9-E-1.5-Q5-LE6	1450368
2.5 m	NEBM-S1G9-E-2.5-Q5-LE6	1450369
5 m	NEBM-S1G9-E-5-Q5-LE6	1450370
7 m	NEBM-S1G9-E-7-Q5-LE6	1450371
10 m	NEBM-S1G9-E-10-Q5-LE6	1450372
Angled plug, min.bending radius: 62 mm, ambient temperature: –40 ... +80 °C		
1.5 m	NEBM-S1W9-E-1.5-Q5-LE6	1450736
2.5 m	NEBM-S1W9-E-2.5-Q5-LE6	1450737
5 m	NEBM-S1W9-E-5-Q5-LE6	1450738
7 m	NEBM-S1W9-E-7-Q5-LE6	1450739
10 m	NEBM-S1W9-E-10-Q5-LE6	1450740
Straight plug, min.bending radius: 80 mm, ambient temperature: –40 ... +80 °C		
1.5 m	NEBM-S1G15-E-1.5-Q7-LE6	1450834
2.5 m	NEBM-S1G15-E-2.5-Q7-LE6	1450835
5 m	NEBM-S1G15-E-5-Q7-LE6	1450836
7 m	NEBM-S1G15-E-7-Q7-LE6	1450837
10 m	NEBM-S1G15-E-10-Q7-LE6	1450838
Angled plug, min.bending radius: 80 mm, ambient temperature: –40 ... +80 °C		
1.5 m	NEBM-S1W15-E-1.5-Q7-LE6	1450943
2.5 m	NEBM-S1W15-E-2.5-Q7-LE6	1450944
5 m	NEBM-S1W15-E-5-Q7-LE6	1450945
7 m	NEBM-S1W15-E-7-Q7-LE6	1450946
10 m	NEBM-S1W15-E-10-Q7-LE6	1450947

Motor cable for motor controller CMMO-ST		
Cable length	Type	Part no.
Straight plug, min.bending radius: 68 mm, ambient temperature: –40 ... +80 °C		
1.5 m	NEBM-M12G8-E-1.5-LE8	1451586
2.5 m	NEBM-M12G8-E-2.5-LE8	1451587
5 m	NEBM-M12G8-E-5-LE8	1451588
7 m	NEBM-M12G8-E-7-LE8	1451589
10 m	NEBM-M12G8-E-10-LE8	1451590
Angled plug, min.bending radius: 68 mm, ambient temperature: –40 ... +80 °C		
1.5 m	NEBM-M12W8-E-1.5-LE8	1451674
2.5 m	NEBM-M12W8-E-2.5-LE8	1451675
5 m	NEBM-M12W8-E-5-LE8	1451676
7 m	NEBM-M12W8-E-7-LE8	1451677
10 m	NEBM-M12W8-E-10-LE8	1451678

Motor cable for servo motor EMME-AS		
Cable length	Type	Part no.
Straight plug (cable cross section: 0.75 mm²)		
2.5 m	NEBM-M16G8-E-2.5-Q7-LE8	8004662
5 m	NEBM-M16G8-E-5-Q7-LE8	8003770
7 m	NEBM-M16G8-E-7.5-Q7-LE8	8004663
10 m	NEBM-M16G8-E-10-Q7-LE8	8003771
15 m	NEBM-M16G8-E-15-Q7-LE8	8003772
Straight plug (cable cross section: 0.15 mm²)		
2.5 m	NEBM-M16G8-E-2.5-Q9-LE8	8004660
5 m	NEBM-M16G8-E-5-Q9-LE8	8003766
7 m	NEBM-M16G8-E-7.5-Q9-LE8	8004661
10 m	NEBM-M16G8-E-10-Q9-LE8	8003767
15 m	NEBM-M16G8-E-15-Q9-LE8	8003768

Encoder cable for servo motor EMME-AS		
Cable length	Type	Part no.
Straight plug		
2.5 m	NEBM-M12G8-E-2.5-N-S1G15	8004664
5 m	NEBM-M12G8-E-5-N-S1G15	8003762
7 m	NEBM-M12G8-E-7.5-N-S1G15	8004665
10 m	NEBM-M12G8-E-10-N-S1G15	8003763
15 m	NEBM-M12G8-E-15-N-S1G15	8003764

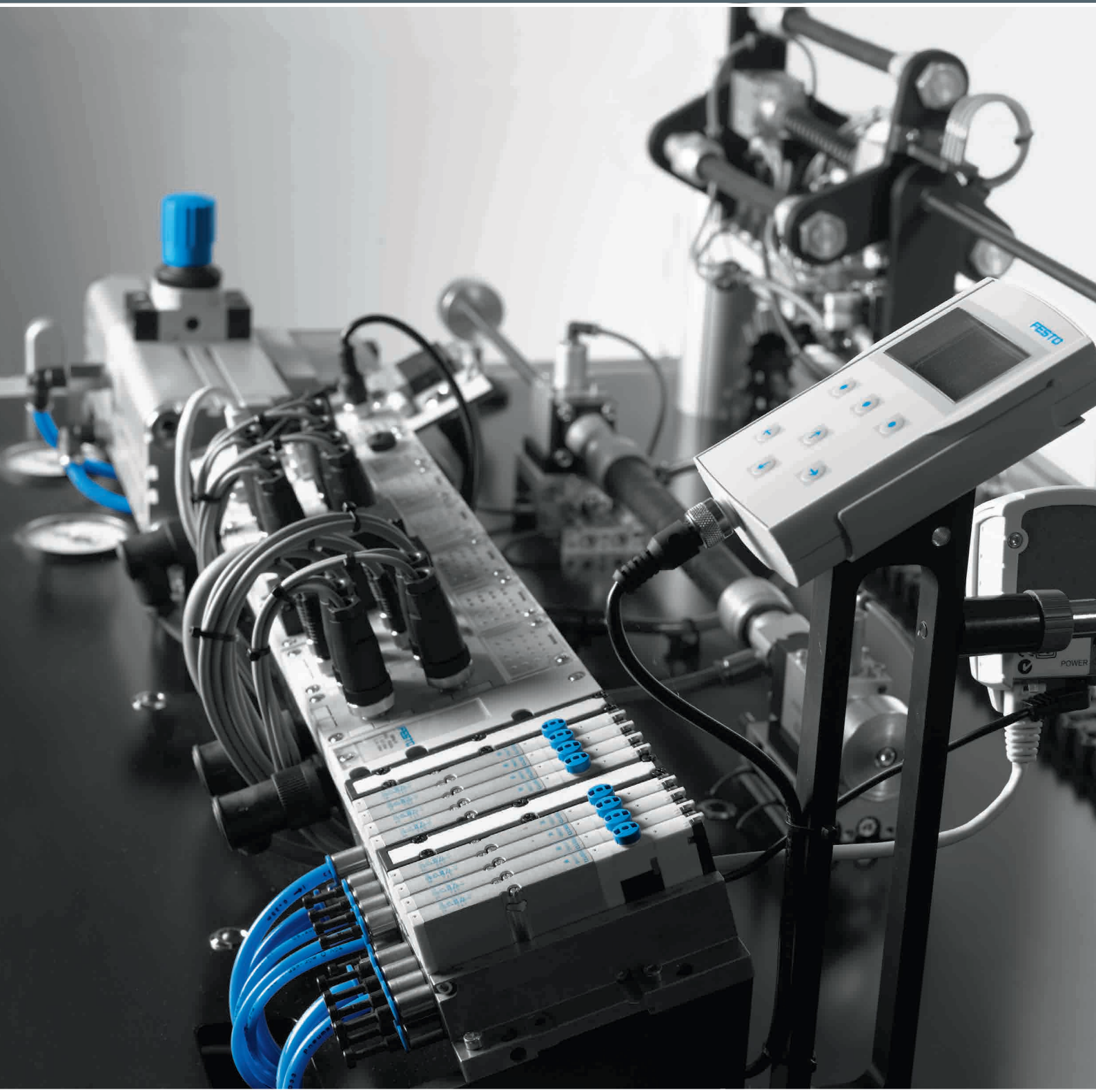

Control technology and software

13

Highlights

CPX

Terminals

- Installation variants: stand-alone, remote I/O or with valve terminal VTSA/MPA
- Digital or analogue input/output modules
- Optional CODESYS controller

Page 235

Contents

Product overview 235

FESTO

Electrical peripherals

	Fieldbus modules CTEU	Terminals CPX
Max.no. of inputs	128	Digital 512, analogue 32
Max.no. of outputs	128	Digital 512, analogue 18
No. of module positions	32	Max. 9 electrical input/output modules
Electrical control	CANopen, DeviceNet®, AS-Interface, CC-LINK®, PROFIBUS, EtherCAT, Ethernet/IP, Profinet, CPI-B, I-Port	Fieldbus, integrated controller
Description	• For valve terminals VTUB-12, VTUG, MPA-L, CPV, VTOC • Can be expanded into installation system CTEL • Fieldbus-typical LEDs, interfaces and switching elements available • Isolated power supply for electronics and valves	• Automation platform • Open to all common fieldbus protocols and Ethernet • Integrated diagnostic and maintenance functions • Can be used as stand-alone as remote I/O or with valve terminals MPA-S, MPA-L, VTSA/VTSA-F • Choice of plastic or metal housing with individual linking
➔ **Page/online**	cteu	cpx

Other pneumatic equipment

14

Highlights

AMTE

Silencers

- Metal version
- High temperature resistance up to 80 °C
- Slim overall width
- Many different variants
- Universal applications

Page 240

U

Silencers

- Polymer design
- Thread connection M5, G1/2, G1/4, G1/8, G3/8, G3/4, G1
- Barbed fitting connection PK-3, PK-4
- Noise level 65 ... 84 dB(A)

Page 241

CRVZS

Air reservoirs

- Compensation of pressure fluctuations and as accumulators in the event of sudden air consumption
- Corrosion-resistant

Page 243

Contents

Product overview 239
Silencers AMTE. 240
Silencers U-.... 241
Silencers UOM/silencer extensions UOMS 242
Air reservoir CRVZS 243

FESTO

Silencers

	Silencers AMTE	Silencers U	Silencers UOM, UOMS
Information on silencer insert materials	Bronze	Bronze, PE	PU foam
Pneumatic connection	G1/8, G1/4, G3/8, G1/2, G3/4, G1, M3, M5, NPT1/2-14, NPT1/4-18, NPT1/8-27, NPT3/8-18, UNF10-32	G1/8, G1/4, G3/8, G1/2, G3/4, G1, NPT3/4-14, PK-3, PK-4, NPT1-11	G1/4, G3/8
Noise level	55 … 95 dB(A)	70 … 85 dB(A)	
Description	• Long or short design • Metal version • Operating medium: compressed air	• Compact design, polymer or die-cast metal • Barbed connector or threaded connection • Operating medium: compressed air	• Special open minimal resistance silencer • For vacuum generators • Facilitates trouble-free operation of the vacuum generator • Silencer extension for extending the silencer for further noise reduction • Operating medium: compressed air
➔ Page/online	**240**	**241**	**242**

Compressed air reservoirs

	Air reservoirs CRVZS
Volume	0.1 l, 0.4 l, 0.75 l, 2 l, 5 l, 10 l, 20 l
Information on air reservoir materials	High-alloy stainless steel
Conforms to standard	AD 2000
Condensate drain connection	G3/8
Description	• Corrosion-resistant • Can be used to compensate pressure fluctuations, and act as accumulators in the event of sudden air consumption • Providing large quantities of compressed air for supplying fast pulsing drives • With port for condensate drain in some cases • See further information on food-safe materials ➔ www.festo.com/sp › Certificates • Designs to EU Pressure Equipment Directive EN 286-1 • Operating media: compressed air, vacuum
➔ Page/online	**243**

FESTO

- Metal
- Long design

Ordering

Version	Type	Part no.	PE[1]	Connection D1		Noise level
				M thread	G thread	[dB (A)]
Long design						
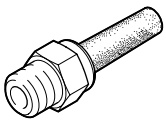	AMTE-M-LH-M5	1205858	20	M5	–	‹ 72
	AMTE-M-LH-G18	1205860	20	–	G⅛	‹ 76
	AMTE-M-LH-G14	1205861	20	–	G¼	‹ 83
	AMTE-M-LH-G38	1205862	10	–	G⅜	‹ 82
	AMTE-M-LH-G12	1205863	10	–	G½	‹ 88
	AMTE-M-LH-G34	1205864	10	–	G¾	‹ 85
	AMTE-M-LH-G1	1205865	10	–	G1	‹ 88

1) Packaging unit quantity

FESTO

- Polymer or die-cast metal design

Ordering

Version	Type	Part no.	PE[1]	Connection D1 G thread	Noise level [dB (A)]
Polymer, male thread					
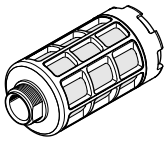	U-1/8	2307	1	G⅛	‹ 77
	U-1/4	2316	1	G¼	‹ 77
	U-3/8	2309	1	G⅜	‹ 82
	U-1/2	2310	1	G½	‹ 80
Die-cast metal					
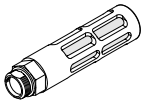	U-1/8-B	6841	1	G⅛	‹ 74
	U-1/4-B	6842	1	G¼	‹ 80
	U-3/8-B	6843	1	G⅜	‹ 80
	U-1/2-B	6844	1	G½	‹ 80

1) Packaging unit quantity

Silencers UOM/silencer extensions UOMS

FESTO

- Use only for vacuum generators VN-T4/T6 ➔ 111
- Special minimal resistance silencer
- Facilitates trouble-free operation of the vacuum generator
- Silencer extension for extending the silencer for further noise reduction

Ordering

Function	Connection D1	Type	Part no.
Silencers	G¼	UOM-1/4	538432
	G⅜	UOM-3/8	538433

Function	Type	Part no.
Silencer extension	UOMS-1/4	538436
	UOMS-3/8	538437

Air reservoir CRVZS

FESTO

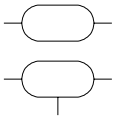

- Corrosion-resistant
- Volume up to 20 l
- Compensation of pressure fluctuations and as accumulators in the event of sudden air consumption
- Providing large quantities of compressed air for supplying fast pulsing drives
- Designs in accordance with EU Pressure Equipment Directive
- Optionally with condensate drain

Ordering

Pneumatic connection	Condensate drain connection	Type of mounting	Volume	Type	Part no.
G⅛	–	Via retaining clips	0.1 l ±20%	CRVZS-0.1	160233
G¼	–	Via retaining clips	0.4 l ±20%	CRVZS-0.4	160234
G¼	–	Via retaining clips	0.75 l ±20%	CRVZS-0.75	160235
G½	–	Via through-hole	2 l ±10%	CRVZS-2	160236
G1	G⅜	Via through-hole	5 l ±10%	CRVZS-5	192159
G1	G⅜	Via through-hole	10 l ±10%	CRVZS-10	160237
G1	G⅜	Via through-hole	20 l ±10%	CRVZS-20	534845

Process automation

15

Highlights

SRBC

Sensor boxes

+ Weatherproof aluminium housing
+ Cost-optimised, high-performance and reliable series

Page 255

CMSX

Positioners

+ Very energy-efficient: no compressed air consumption at standstill
+ Ideally suited to dispensing applications

Page 259

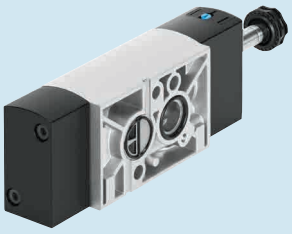

VSNC

Solenoid valves, to NAMUR

+ Certified in accordance with established explosion standards
+ Sturdy and capable of high flow rates

Page 125

DFPD

Quarter turn actuators

+ Flange hole pattern to ISO 5211
+ Port pattern to NAMUR for solenoid valves and sensor boxes to VDI/VDE 3845

Page 261

FESTO

Contents

Product overview 248
Sensor boxes SRBC 255
Sensor boxes SRBG 257
Positioners CMSX 259
Quarter turn actuators DFPD 261
Ball valves QH 263
Angle seat valves VZXF 264
Angle seat valves VZXA 266
Solenoid valves VZWD, directly actuated 268
Solenoid valves VZWF, force pilot operated 270
Solenoid valves VZWM 272
Pinch valves VZQA 274

Standardising and automating process valves

Fully automated process valves from a single source make planning, procurement and commissioning significantly easier and cost effective. They eliminate a considerable amount of project management work, reduce warehousing costs for spare parts, and speed up service and maintenance.

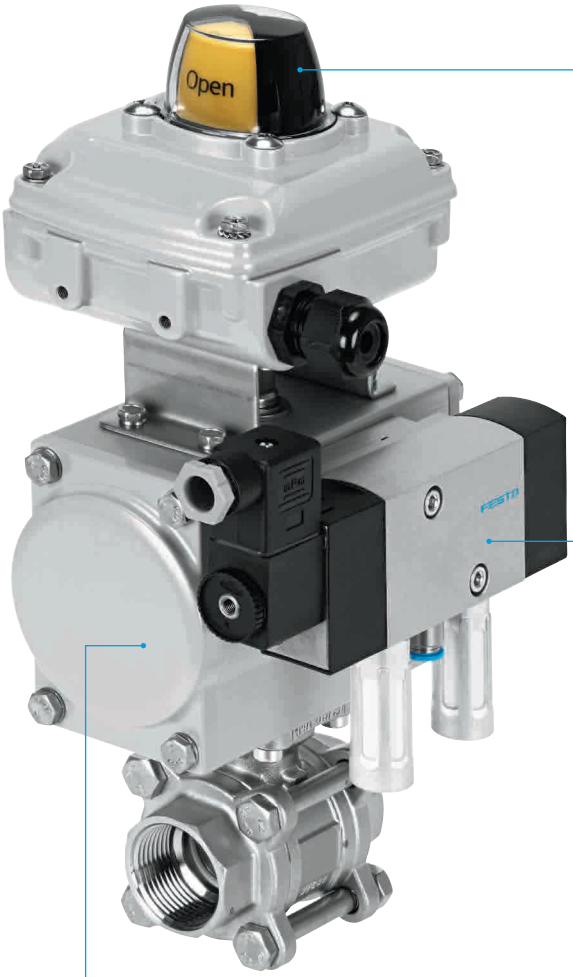

Position sensing for all application areas
Whether for open solutions with the sensor SRBG, the sturdy sensor box SRBC for basic applications in indoor and outdoor areas, or the all-rounder SRBE for explosion-proof areas,
Festo always has the right solution.

An alternative to the sensor box: the reliable positioner CMSX for analogue control
It enables the positions of quarter turn actuators to be accurately sensed and flow rates to be controlled, for example.

Standard NAMUR valve VSNC
Controls quarter turn actuators and linear actuators with a VDI/VDE 3845 interface. Globally certified in accordance with current Ex standards. Now also available with poppet valve technology.

Pilot valves VOFC/VOFD
An extremely sturdy alternative to the valve VSNC. Ideal for outdoor areas and potentially explosive atmospheres. The extremely sturdy VOFC/VOFD can control valve actuators in the chemical, petrochemical and pharmaceutical production plants of leading companies worldwide.

Quarter turn actuator DFPD
The new benchmark for quarter turn actuators. Its range of variants and standardised hole patterns to NAMUR VDI/VDE 3845 for pilot valves open up a wide variety of possible applications.

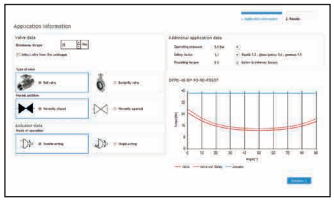

Software tools for easy selection and configuration of process valve units.

We offer a wide selection of tubing and fittings for a broad range of applications, from standard applications to applications with specific external influences.
➔ „Pneumatic connection technology“ page 199

You can find the appropriate components here:
➔ **www.festo.com/productfinder/fittings**

FESTO

Pilot valves

	Solenoid valves VSNC	Solenoid valves VOFC	Solenoid valves VOFD
Valve function	5/2-way, double solenoid, 5/2-way or 3/2-way, convertible, 5/3-way, pressurised, 5/3-way, exhausted, 5/3-way, closed	3/2-way, single solenoid, closed, 5/2-way, double solenoid, 5/2-way, single solenoid	3/2-way, single solenoid, closed, semi-automatic, 3/2-way, single solenoid, closed
Operating pressure	2.5 … 10 bar	2 … 8 bar	0 … 12 bar
Ambient temperature	–20 … 60 °C	–25 … 60 °C	–50 … 60 °C
Pneumatic port 1	G1/4, NPT1/4-18	G1/2, G1/4, NPT1/4-18, port pattern to NAMUR	G1/4, NPT1/4-18, port pattern to NAMUR
Standard nominal flow rate	800 … 1350 l/min	766 … 2686 l/min	49 … 1888 l/min
Explosion prevention and protection	For zone 1, 21	II 2G, II 2D, for zone 1, 2, 21, 22, Ex tD A21 IP65 T80 °C, T95 °C, Ex emb II T6, T5, Ex ia IIC T6, T5	II 2G, II 2D, for zone 1, 2, 21, 22, Ex tD A21 IP65 T80 °C, T95 °C, Ex emb II T6, T5
Description	• NAMUR interface • Rotatable seal for 3/2-way or 5/2-way valve • Wide choice of EX solenoid systems • Sturdy and powerful • Extended temperature range • Outstanding value for money	• Suitable for process automation, for use in chemical and petrochemical plants • Suitable for outdoor use under harsh ambient conditions • Especially suitable for quarter turn actuators thanks to NAMUR flange pattern • Valve can switch between internal and external pilot air • Variants with TÜV approval up to SIL3 to IEC 61508	• Suitable for process automation, for use in chemical and petrochemical plants • Suitable for outdoor use under harsh ambient conditions • Especially suitable for quarter turn actuators thanks to NAMUR flange pattern • Variants with TÜV approval up to SIL4 acc. to IEC 61508
➔ Page/online	125	vofc	vofd

Sensor boxes

	Sensor boxes SRBC	Sensor boxes SRBG
Information on materials – housing	Die-cast aluminium	PBT
Operating voltage range AC	0 … 250 V	
Operating voltage range DC	0 … 175 V	6 … 60 V
Measuring principle	Inductive, magnetic reed, mechanical/electrical, for proximity sensor	Inductive
Switching element function	N/C contact, N/O contact, toggle switch, single-pole	N/C contact, N/O contact, N/C contact or N/O contact, switchable
Description	• Weatherproof housing, also for outdoor applications • Trip cams can be set easily without additional tools • Sturdy, corrosion-resistant design, ideal for use in harsh operating conditions • Clearly visible 3D position indicator allows rapid detection of the current position of the quarter turn actuator	• Compact housing with M12 plug connection • Direct mounting on quarter turn actuators to VDI/VDE 3845 • AS-Interface version with extended addressing • Intrinsically safe version to ATEX and SIL 2 to IEC 61508
➔ Page/online	255	257

FESTO

Sensor boxes

	Sensor boxes SRAP	Sensor boxes SRBE
Information on materials – housing	Wrought aluminium alloy	Die-cast aluminium
Operating voltage range AC		0 … 250 V
Operating voltage range DC	15 … 30 V	0 … 60 V
Measuring principle	Magnetic Hall	Inductive, magnetic reed, mechanical/electrical, for proximity sensor
Switching element function		N/C contact, N/O contact, toggle switch, single-pole, double-pole
Description	• Based on standard VDI/VDE 3845 (NAMUR) • Analogue • For monitoring the position of quarter turn actuators • Sensors based on 2D Hall technology	• Worldwide certifications (ATEX, IECEX, cCSAus, INMETRO) for use in potentially explosive environments • Trip cams can be set easily without additional tools • Sturdy, corrosion-resistant design, ideal for use in harsh operating conditions • Clearly visible 3D position indicator allows rapid detection of the current position of the quarter turn actuator
➔ Page/online	srap	srbe

Positioners

	Positioners CMSX
Standard nominal flow rate	50 … 130 l/min
Ambient temperature	–5 … 60 °C
Reference value	0 – 20 mA, 4 – 20 mA, 0 – 10 V
Operating pressure	3 … 8 bar
Safety information	Adjustable, opening, closing, holding
Operating voltage range DC	21.6 … 26.4 V
Description	• For position control of double-acting pneumatic quarter turn actuators in process automation systems • Simple and efficient position control based on the PID control algorithm • Suitable for quarter turn actuators with a swivel angle of approx. 90° and a mechanical interface in accordance with VDI/VDE Directive 3845 • Power supply 24 V DC
➔ Page/online	**259**

FESTO

Linear actuators

	Linear actuators with displacement encoder DFPI-NB3P	Linear actuators with displacement encoder DFPI	Copac linear actuators DLP
Piston diameter	100 mm, 125 mm, 160 mm, 200 mm, 250 mm, 320 mm	100 mm, 125 mm, 160 mm, 200 mm, 250 mm, 320 mm	80 mm, 100 mm, 125 mm, 160 mm, 200 mm, 250 mm, 320 mm
Stroke	40 … 990 mm	40 … 990 mm	40 … 600 mm
Theoretical force at 6 bar, advancing	4712 … 48255 N	4712 … 48255 N	3016 … 48255 N
Position sensing	Via integrated displacement encoder	Via integrated displacement encoder	Via proximity sensor
Description	• Standards-based linear actuators to ISO 15552 • Easy connection to external positioners • Ideal for use under harsh ambient conditions • IP65, IP67, IP69K, NEMA4 • ATEX 2GD certification • Temperature range –20 … 80 °C	• Closed-loop controlled actuator for all linear process valves • Optionally with integrated positioner and valve block • Position feedback via analogue 4 … 20 mA signal for simple diagnostics • Easy integration into existing control architecture • Sturdy and compact housing for use outdoors • Connection for process valves to DIN 3358 • Temperature range –20 … 60 °C	• Port pattern to NAMUR for solenoid valves to VDI/VDE 3845 • Integrated air supply • Connection for process valves to DIN 3358
➔ Page/online	dfpi	dfpi	dlp

Quarter turn actuators

	Quarter turn actuators DAPS	Quarter turn actuators DFPD
Design	Scotch yoke system	Rack and pinion
Mode of operation	Double-acting, single-acting	Double-acting, single-acting
Size of valve actuator	0008, 0015, 0030, 0053, 0060, 0090, 0106, 0120, 0180, 0240, 0360, 0480, 0720, 0960, 1440, 1920, 2880, 3840, 4000, 5760, 8000	10, 20, 40, 80, 120, 160, 240, 300, 480
Flange hole pattern	F03, F04, F05, F07, F10, F12, F14, F16, F25	F03, F04, F05, F0507, F0710, F1012
Operating pressure	1 … 8.4 bar	2 … 8 bar
Ambient temperature	–50 … 150 °C	–50 … 150 °C
Description	• High breakaway torques • Approved in accordance with Directive 2014/34/EU (ATEX) • Flange hole pattern to ISO 5211 • Mounting hole pattern to VDI/VDE 3845 • Available with handwheel as a manual emergency override • Corrosion-resistant version made from stainless steel	• Uniform torque characteristic across the entire rotation angle range of 90° • Process valve connection to ISO 5211 on both sides • Can be mounted on all process valves using pressure relief slot • Mounting hole pattern to VDI/VDE 3845 • Sturdy, non-slip and easy-to-clean aluminium housing • Long service life, low wear • Increased corrosion protection
➔ Page/online	daps	261

FESTO

Ball valves and ball valve units

	Ball valves QH	Ball valves VZBD	Ball valves VZBE	Ball valves VZBF
Design	Ball valve	2-way ball valve	2-way ball valve, 3-way ball valve with L-shaped hole or T-shaped hole	2-way ball valve
Actuation type	Manual	Mechanical	Mechanical	Mechanical
Nominal width DN	10 ... 40 mm	DN15 ... DN100	8 ... 100	
Process valve connection	G1/4, G3/8, G1/2, G3/4, G1, G1 1/2	Welding end to ISO 1127, welding end to ASME-BPE, clamp ferrule to DIN 32676-B, clamp ferrule to ASME-BPE	NPT 1/4 ... NPT4	Flange to ANSI 150
Flow rate Kv	3400 ... 84000 l/min	3.5 ... 436.3 m³/h	5 ... 435.2 m³/h	8,5 ... 2078,3 m³/h
Temperature of medium	-20 ... +180 °C	–20 ... +200 °C	–20 ... +200 °C	–20 ... +200 °C
Description	• Shut-off valve, manually operated • In-line installation • Female thread at both ends • With hand lever • Pipe thread to ISO 228-1	• 2-way shut-off valve • Stainless steel design • Electropolished surfaces • PTFE seal with minimal dead space • The high-performance ball valve for the pharmaceutical and cosmetics industry • FDA-compliant seal to FDA 21 CFR 177.1550	• 2-way or 2-way manual, with lockable hand lever • 3-way, L-shaped or T-shaped hole as horizontal design • Stainless steel design • Pipe thread to ASME B1.20.1	• 2-way • Stainless steel design • Thread to ANSI B 16.5. class 150 • Static discharge assured • API 607 Fire Safe approval • Easy to service
➔ Page/online	**263**	**vzbd**	**vzbe**	**vzbf**

Ball valves and ball valve units

	Ball valves VZBM	Ball valves VZBC	Ball valve actuator units VZBC
Design	2-way ball valve, 2-way ball valve with hand lever, 3-way ball valve with L-shaped hole or T-shaped hole	2-way ball valve	2-way ball valve, quarter turn actuator
Actuation type	Mechanical	Mechanical	Pneumatic
Nominal width DN		100 mm, 15 mm, 20 mm, 25 mm, 32 mm, 40 mm, 50 mm, 65 mm, 80 mm	100 mm, 15 mm, 20 mm, 25 mm, 32 mm, 40 mm, 50 mm, 65 mm, 80 mm
Process valve connection	Rp1/4 ... Rp2	Ring housing with threaded flange	Ring housing with threaded flange
Flow rate Kv	5.9 ... 292 m³/h	19.4 ... 1414 m³/h	19.4 ... 1414 m³/h
Temperature of medium	–15 ... +130 °C	-10 ... 200 °C	-10 ... 200 °C
Description	• 2-way with hand lever • Brass design • Pipe thread to EN 10226-1	• Ring housing with threaded flange • Automatable 2-way ball valve with compact flange • Stainless steel design • Short installation length to DIN EN 1092-1 • Blow-out proof shaft • Manual operation possible using hand lever • Connecting thread to DIN 2999 • Mounting flange to ISO 5211 • Short installation length to DIN EN 1092-1 • ATEX certification for zone 1, 21, 2, 22	• Ball valve actuator unit with double-acting or single-acting quarter turn actuator • Stainless steel ball valve in compact design • NAMUR connection pattern for solenoid valves/sensor boxes to VDI/VDE 3845 • Flow is fully opened or closed in both directions • ATEX certification for zone 1, 21, 2, 22
➔ Page/online	**vzbm**	**vzbc**	**vzbc**

FESTO

Ball valves and ball valve units

	Ball valves VZBA	Ball valve actuator units VZBA	Ball valve actuator units VZPR
Design	2-way ball valve, 3-way ball valve, L-shaped hole, T-shaped hole	2-way ball valve, 3-way ball valve, L-shaped hole, quarter turn actuator, T-shaped hole	2-way ball valve, quarter turn actuator
Actuation type	Mechanical	Pneumatic	Pneumatic, electrical
Nominal width	8 mm, 10 mm, 15 mm, 20 mm, 25 mm, 32 mm, 40 mm, 50 mm, 65 mm, 80 mm, 100 mm	8 mm, 10 mm, 15 mm, 20 mm, 25 mm, 32 mm, 40 mm, 50 mm, 65 mm, 80 mm, 100 mm	15 mm, 20 mm, 25 mm, 32 mm, 40 mm, 50 mm, 63 mm
Process valve connection	Rp1/4, Rp3/8, Rp1/2, Rp3/4, Rp1, Rp1 1/4, Rp1 1/2, Rp2, Rp2 1/2, Rp3, Rp4, weld-on ends/weld-on ends	Rp1/4, Rp3/8, Rp1/2, Rp3/4, Rp1, Rp1 1/4, Rp1 1/2, Rp2, Rp2 1/2, Rp3, Rp4, weld-on ends/weld-on ends	Rp1/4, Rp3/8, Rp1/2, Rp3/4, Rp1, Rp1 1/4, Rp1 1/2, Rp2, Rp2 1/2
Flow rate Kv	7 … 1414 m³/h	7 … 1414 m³/h	5.9 … 535 m³/h
Temperature of medium	–10 … 200 °C	–10 … 200 °C	–20 … 150 °C
Description	• Automatable 2-way or 3-way ball valve • Stainless steel design • Blow-out proof shaft • Manual operation possible using hand lever • Connecting thread to DIN 2999 • Mounting flange to ISO 5211 • ATEX certification for zone 1, 21, 2, 22	• Ball valve actuator unit with double-acting or single-acting quarter turn actuator • Stainless steel ball valve • Port pattern to NAMUR for solenoid valves/ sensor boxes to VDI/VDE 3845 • Flow is fully opened or closed in both directions • ATEX certification for zone 1, 21, 2, 22	• Ball valve actuator unit with double-acting quarter turn actuator • Brass ball valve • Port pattern to NAMUR for solenoid valves/ sensor boxes to VDI/VDE 3845 • Flow is fully opened or closed in both directions
➔ **Page/online**	vzba	vzba	vzpr

Angle seat valves

	Angle seat valves VZXF	**Angle seat valves VZXA**
Design	Poppet valve with spring return	Poppet valve with piston actuator
Valve function	2/2-way closed, monostable	2/2
Actuation type	Pneumatic	Pneumatic
Nominal width DN	15 mm, 20 mm, 25 mm, 32 mm, 40 mm, 50 mm	1/2“ … 2“, DN13 … DN50
Nominal width	12 … 45 m	
Process valve connection	G3/4, G1, G1 1/4, G1 1/2, G2 NPT3/4, NPT1, NPT1 1/4, NPT1 1/2, NPT2	
Flow rate Kv	3.3 … 43 m³/h	6 … 50.1 m³/h
Medium pressure	–0.9 … 40 bar	4.4 … 30 bar
Temperature of medium	–40 … 200 °C	–10 … +180 °C
Description	• Sturdy design • Stainless steel and gunmetal (red brass) process valves with stainless steel, brass or aluminium actuators • For medium pressures up to 40 bar • Safety position “closing” • Different actuator sizes and housing materials • Selection of different seat and shaft seals • Flow direction is freely selectable • For liquids, gases and other easily contaminated media • Easy-to-clean design	• Very flexible with extremely high flow rates • Long service life • Modular design • Hygienic design, insensitive to dirt • Quick and easy maintenance • Simple and sturdy: an ideal choice for virtually all media with a viscosity of up to 600 mm2/s • High chemical and thermal resistance
➔ **Page/online**	264	266

FESTO

Solenoid actuated media valves

	Solenoid valves VZWD	Solenoid valves VZWF	Solenoid valves VZWM
Design	Directly actuated poppet valve	Diaphragm valve, force pilot operated	Poppet valve with diaphragm seal
Actuation type	Electrical	Electrical	Electrical
Nominal width	1 … 6 mm	13.5 … 50 mm	13 … 50 m
Process valve connection	G1/8, G1/4, NPT1/8, NPT1/4	G1/4, G3/8, G1/2, G3/4, G1, G1 1/4, G1 1/2, G2 NPT1/4, NPT3/8, NPT1/2, NPT3/4, NPT1, NPT1 1/4, NPT1 1/2, NPT2	G1/4, G3/8, G1/2, G3/4, G1, G1 1/4, G1 1/2, G2
Flow rate Kv	0.06 … 0.4 m³/h	1.8 … 28 m³/h	1.6 … 39 m³/h
Standard nominal flow rate			1400 … 31000 l/min
Medium pressure	0 … 90 bar	0 … 10 bar	0.5 … 10 bar
Temperature of medium	–10 … 80 °C	–10 … 80 °C	–10 … 60 °C
Description	• Extensive pressure range • Directly actuated poppet valve • No pressure difference required • Can also be used in vacuum technology	• High flow rates • Large nominal diameters with relatively small solenoids • No pressure difference required • Can also be used in vacuum technology	• Poppet valve with diaphragm seal • Brass or stainless steel casting design • Electrical connection via solenoid armature tube • Wide range of coils • Coil can be ordered separately
➔ Page/online	**268**	**270**	**272**

Solenoid actuated media valves

	Solenoid valves VZWP	Reverse jet pulse valves VZWE-E, VZWE-F
Design	Pilot-actuated piston poppet valve	Angled version, straight version with flange, diaphragm valve
Actuation type	Electrical	Electrical
Nominal width	13 … 25 mm	20 … 76 mm
Process valve connection	G1/4, G3/8, G1/2, G3/4, G1 NPT1/4, NPT3/8, NPT1/2, NPT3/4, NPT1	G3/4, G1, G1 1/2, G2, G2 1/2, flange diameter 60 mm, 75 mm, 89 mm
Flow rate Kv	1.5 … 11.5 m³/h	15 … 210 m³/h
Medium pressure	0.5 … 40 bar	0.35 … 8 bar
Temperature of medium	–10 … 80 °C	–20 … 60 °C
Description	• For all applications with a differential pressure of min. 0.5 bar • For high pressures and high flow rates with relatively small solenoids • For controlling gaseous and liquid media in open circuits	• High flow rates • For mechanically cleaning filters and dust filter systems • Fast opening and closing times • Sturdy pilot system
➔ Page/online	vzwp	vzwe

FESTO

Pneumatically actuated media valves

	 Pinch valves **VZQA**
Design	Pinch valve, pneumatically actuated
Actuation type	Pneumatic
Nominal width DN	6 mm, 15 mm, 25 mm
Nominal size	
Process valve connection	G1/4, G1/2, G1, NPT1/4, NPT1/2, Clamp to ASME-BPE type A/type B, clamp to DIN 32676 series A
Flow rate Kv	0.7 … 18 m^3/h
Standard nominal flow rate	
Medium pressure	0 … 6 bar
Temperature of medium	–5 … 100 °C
Description	• Modular design • 2/2-way, closed, monostable, 2/2-way, open, monostable • Quick and easy replacement of the diaphragm • Selection of different materials for housing and connection caps • Different connection cap designs (G and NPT thread), clamp ferrule to DIN 32676 and ASME-BPE • For critical, abrasive and viscous media • Up to 2 million switching cycles • FDA-compliant materials • Easy-to-clean design • Flow direction is freely selectable
➔ **Page/online**	**274**

FESTO

- Measuring principle: electromagnetic or magnetic reed
- Switching element function: toggle switch, single-pole (SPDT)
- For DC and AC voltage
- Pre-assembled mounting bridge
- Cable connector and blanking plug included in the scope of delivery
- Selected types in accordance with ATEX directive for potentially explosive atmospheres ➔ **www.festo.com/ex**

Order code – Basic design

001		002	003		004	005		006		007		008		009	010		011
SRBC	–	C	A3	–	YR	90	–		–		–		–	C2	P20	–	

Legend: Mandatory entry Optional entry

001	Type
SRBC	Limit switch attachment

002	Design
C	Sensor box

003	Mechanical interface
A3	Mounting adapter, hole pattern 30x80 mm, shaft height 20 mm

004	Display type
YR	Position indicator yellow/red

005	Measuring range
90	0 … 90°

006	Sensor principle
N	Proximity sensor, inductive
MW	Floating contact, changeover switch
R	Reed with contact

007	Nominal operating voltage
2A	110 V AC, 50-60 Hz
22 A	250 V AC
20N	8.2 V DC, NAMUR
1	24 V DC

008	Electrical output
1 W	1-pin toggle switch
ZC	2-wire N/C contact
ZU	2-wire N/O contact
P	PNP
N	NPN

009	Electrical connection
C2	Screw terminal

010	Cable connector
P20	M20x1.5, polymer

011	EU certification
–	None
EX4	II2GD

Ordering

Electromechanical and magnetic reed

	Type	Part no.
006 Reed with contact		
007 110 V AC, 50-60 Hz	SRBC-CA3-YR90-R-2A-1W-C2P20	3482811
006 Floating contact, changeover switch		
007 250 V AC	SRBC-CA3-YR90-MW-22A-1W-C2P20	3482805

Inductive

	Type	Part no.
006 Proximity sensor, inductive		
007 8,2 V DC, NAMUR	SRBC-CA3-YR90-N-20N-ZC-C2P20	3482806
007 8,2 V DC, NAMUR, 011 II2GD	SRBC-CA3-YR90-N-20N-ZC-C2P20-EX4	3482807
007 24 V DC	SRBC-CA3-YR90-N-1-P-C2P20	3482808
007 24 V DC	SRBC-CA3-YR90-N-1-N-C2P20	3482809
007 24 V DC	SRBC-CA3-YR90-N-1-ZU-C2P20	3482810

FESTO

Accessories

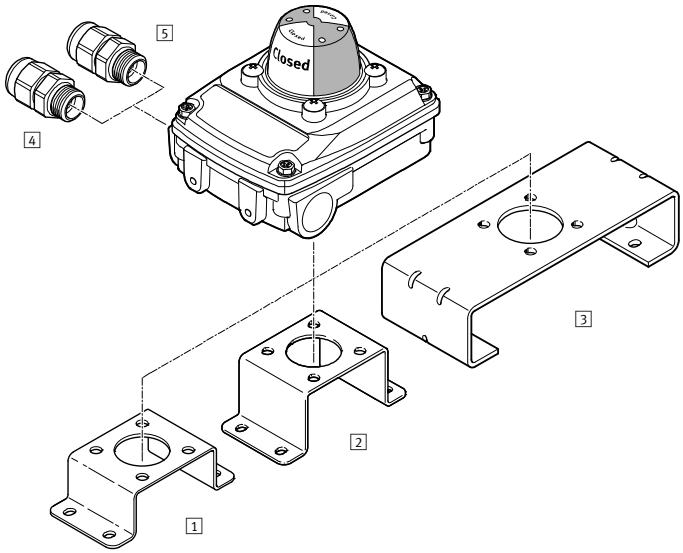

1 Mounting bridge
DARQ-K-X1-A1-F05-20-R1[1] → srbc

2 Mounting bridge
DARQ-K-X1-A1-F05-30-R1[1] → srbc

3 Mounting bridge
DARQ-K-X1-A2-F05-30-R1[1] → srbc

4 Cable connector
NETC-P-M20-P4[1] → srbc

5 Cable connector
NETC-M-M20-P4 → srbc

1) Included in the scope of delivery of the sensor box

FESTO

SRBG-...-M12

SRBG-...-C2

- Inductive double sensor
- Direct mounting on quarter turn actuators to VDI/VDE 3845
- No adjustment is necessary when mounting the sensor
- For clockwise and anticlockwise rotating actuators with 90° and 180° rotation
- Selected types in accordance with ATEX directive for potentially explosive atmospheres ➔ **www.festo.com/ex**

Order code – Basic design

001	002	003	004	005	006	007	008
SRBG	C1	N	1				

Legend: Mandatory entry Optional entry

001	Type
SRBG	Sensor box

002	Design
C1	Dual sensor

003	Sensor principle
N	Proximity sensor, inductive

004	Nominal operating voltage
1	24 V DC

005	Electrical output
P	PNP
ZU	2-wire N/O contact
AS	AS-Interface

006	Electrical connection
C2	Screw terminal
M12	M12 plug, A-coded

007	Electrical connection, valve
–	None
C2	Screw terminal
M12	M12 plug, A-coded

008	EU certification
–	None

Product options

Nominal operating voltage
– 8,2 V DC, NAMUR

Electrical output
– 2-wire N/C contact

EU certification
– II1G

Ordering – Product options

Configurable product

This product and all its product options can be ordered using the configurator.

The configurator can be found under Products at
➔ **www.festo.com/catalogue/...**

Enter the type or the configuration part number in the search field.

Ordering – Basic design

Terminal rail connection for sensor and solenoid valve

005 Electrical output	Type	Part no.
PNP	SRBG-C1-N-1-P-M12	3568055
2-wire N/O contact	SRBG-C1-N-1-ZU-M12	3568056
AS-Interface	SRBG-C1-N-1-AS-M12-M12	3567908

Sensor connection via M12 plug connector

005 Electrical output	Type	Part no.
PNP	SRBG-C1-N-1-P-C2-C2	3568165
2-wire N/O contact	SRBG-C1-N-1-ZU-C2-C2	3568166

FESTO

Accessories

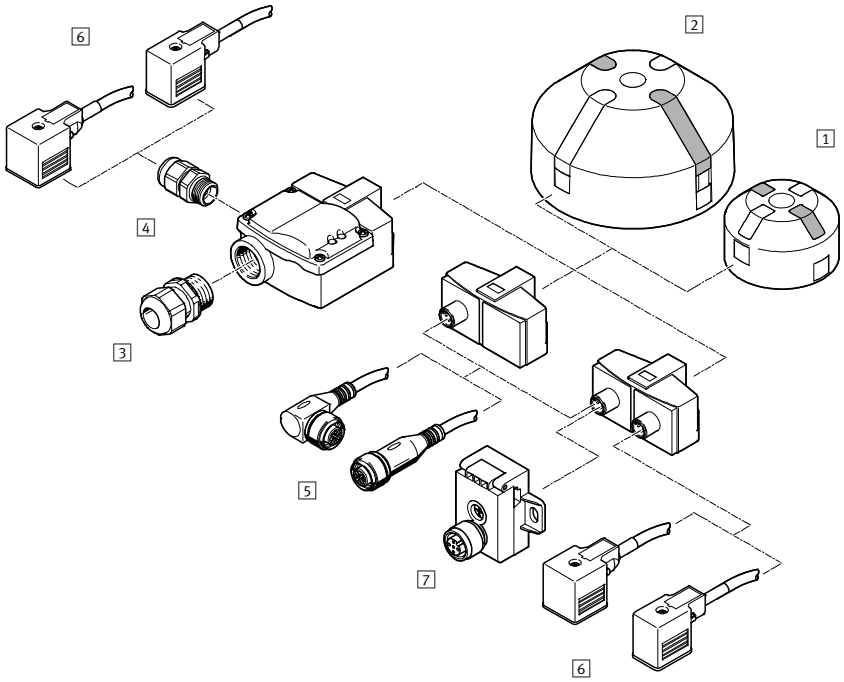

1 Position indicator SASF-...-A34
➔ srbg
2 Position indicator SASF-...-A56
➔ srbg
3 Cable connector NETC-P-M20-...
➔ srbg
4 Cable connector NETC-P-M12-...
➔ srbg
5 Connecting cables NEBU-M12
➔ 258
6 Connecting cables NEBV ➔ srbg
7 AS-Interface components ➔ srbg

6 **Connecting cable NEBU**		
Cable length	Type	Part no.
Straight socket, 5-pin, M12 – open cable end, 3-wire		
2.5 m	NEBU-M12G5-K-2.5-LE3	541363
5 m	NEBU-M12G5-K-5-LE3	541364

FESTO

- Positioners for single- and double-acting pneumatic quarter turn actuators and double-acting linear actuators in process automation systems
- High process reliability thanks to analogue and digital feedback signals
- The end position can be flexibly defined via the freely configurable analogue signal
- Very energy-efficient: no compressed air consumption at standstill
- For automated butterfly valves, ball valves, bulk goods deflectors, etc.

Order code

001		002		003		004		005		006		007		008		009		010
CMSX	–	P	–		–	C	–	U	–	F1	–		–		–		–	

Legend: [ ] Mandatory entry [ ] Optional entry

001	Type
CMSX	Positioner, for process automation

002	Product version
P	Primarily polymers

003	Design
S	Positioner, integrated displacement/angle measurement
SE	Positioner, external displacement/angle measurement

004	Display type
C	LCD, backlit

005	Setpoint value
U	Configurable (0 ... 10 V, 0 ... 20 mA, 4 ... 20 mA)

006	Position feedback
F1	4 ... 20 mA

007	Function
D	Double-acting
S	Single-acting

008	Flow
50	50 l/min
130	130 l/min

009	Safety function
A	Open or close in the event of a system crash[1]
C	Maintain position[2] in the event of a system crash[1]

010	Generation
G1	First generation
–	Second generation

1) Failure of the power supply
2) Pressurise quarter turn actuator at both ends

Ordering

Suitable for[1]					Safety function[2]	Type	Part no.
Quarter turn actuators DAPS ➔ 250		Quarter turn actuators DFPD ➔ 261		Linear actuators DFPI ➔ 250			
Single-acting	Double-acting	Single-acting	Double-acting	Double-acting			
Size				Piston diameter			
–	–	–	20 ... 40	–	In the case of a broken cable or a failure in the operating voltage, the regulating action is opening/closing.	CMSX-P-S-C-U-F1-D-50-A-G1	2092434
≥53	–	≥40	–	–		CMSX-P-S-C-U-F1-S-50-A	3929370
–	≥60	–	≥40	–		CMSX-P-S-C-U-F1-D-50-A	3929313
–	–	–	–	100 ... 320 mm		CMSX-P-SE-C-U-F1-D-130-A	3929539
–	≥120	–	–	–		CMSX-P-S-C-U-F1-D-130-A	3929312
≥120	–	≥120	≥120	–		CMSX-P-S-C-U-F1-S-130-A	3929369
–	–	–	–	–	In the case of a broken cable or a failure in the operating voltage, the regulating action is holding.	CMSX-P-S-C-U-F1-D-50-C-G1	2110841
–	≥120	–	20 ... 40	–		CMSX-P-S-C-U-F1-D-130-C	3929314
–	≥60	–	≥120	–		CMSX-P-S-C-U-F1-D-50-C	3929315
–	–	–	≥ 40	100 ... 320 mm		CMSX-P-SE-C-U-F1-D-130-C	3929540

1) Precise selection of the positioner for the actuator is dependent on the specific application. Only rough reference values are specified here.
2) Depending on the tubing connection of the positioner with the actuator, the process valve is opened or closed.

FESTO

Accessories

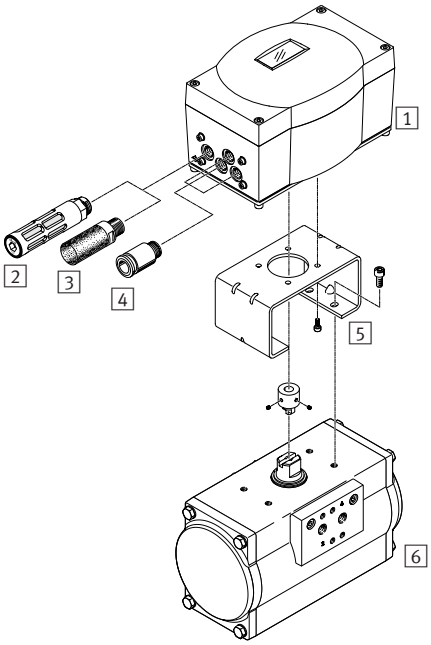

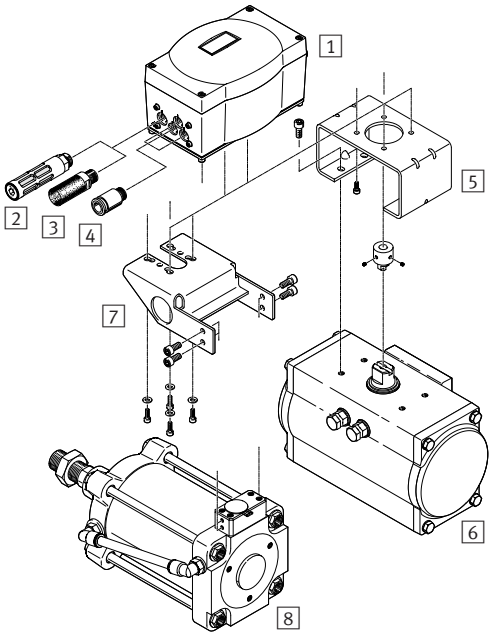

1 Positioner CMSX ➔ 259
2 Silencer U, polymer, male thread ➔ 241
3 Silencer UC, for reducing noise at valve exhaust ports ➔ uc
4 Push-in fitting QS ➔ 205
5 Mounting bridge DARQ, for connecting positioners/actuators for process automation ➔ 260
6 Quarter turn actuator DFPD ➔ 261
7 Adapter kit DADG, for direct mounting of a positioner on the linear actuator DFPI ➔ dadg
8 Linear actuator DFPI ➔ dfpi

5 Mounting bridge DARQ

	Size	Type	Part no.
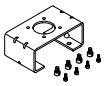	20	DARQ-K-P-A1-F05-20-R1	2197135
	30	DARQ-K-P-A1-F05-30-R1	2197136

FESTO

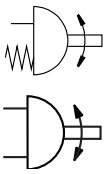

- Size 10 … 480
- Torque 10 … 480 Nm
- Swivel angle 0 … 90°, 0 … 180°
- Flange hole pattern to ISO 5211
- Connection pattern to NAMUR for solenoid valves/sensor boxes to VDI/VDE 3845
- Suitable for the automation of butterfly valves, ball valves
- Also suitable for water/wastewater, beverage, pharmaceutical and process automation

Order code

001	002	003	004	005	006	007	008	009	010	011	012	013	014	015	016
DFPD	–	–	–	RP	–	90	R								

Legend: Mandatory entry; Optional entry

001	Type
DFPD	Quarter turn actuator

002	System of units
–	Metric

003	Version
–	Standard

004	Torque		
10	10 Nm	**160**	160 Nm
20	20 Nm	**240**	240 Nm
40	40 Nm	**300**	300 Nm
80	80 Nm	**480**	480 Nm
120	120 Nm		

005	Design
RP	Rack and pinion

006	Yoke type
–	None

007	Swivel angle
90	90°

008	Swivel direction
R	To the right

009	Function
D	Double-acting
S	Single-acting

010	Spring configuration
–	Without
60	For connection pressure 6 bar

011	Flange pattern 1
F03	Hole pattern F03
F04	Hole pattern F04
F05	Hole pattern F05
F07	Hole pattern F07
F10	Hole pattern F10

012	Flange pattern 2
–	Without
07	Hole pattern F07
10	Hole pattern F10
12	Hole pattern F12

013	Manual override
–	None

014	Temperature range
–	Standard

015	Corrosion protection
–	Standard

016	Housing surface treatment
–	None

Product options

System of units
– Imperial
Swivel angle
– 180°

Swivel direction
– To the left
Spring configuration
– For connection pressure 2 … 5.5 bar

Temperature range
– 0 … +150 °C
– −50 … +60 °C
Corrosion protection
– High corrosion protection

Housing surface treatment
– Epoxy-coated

Ordering – Product options

Configurable product

This product and all its product options can be ordered using the configurator.

The configurator can be found under Products at
➔ **www.festo.com/catalogue/...**

Enter the type or the configuration part number in the search field.

FESTO

Ordering

004 Torque [Nm]	Type	Part no.
Quarter turn actuators DFPD, single-acting		
10	–	
20	DFPD-20-RP-90-RS60-F04	8047622
	DFPD-20-RP-90-RS60-F05	8048015
40	DFPD-40-RP-90-RS60-F0507	8047624
80	DFPD-80-RP-90-RS60-F0507	8047626
120	DFPD-120-RP-90-RS60-F0507	8048134
160	DFPD-160-RP-90-RS60-F0710	8048136
240	DFPD-240-RP-90-RS60-F0710	8048138
300	DFPD-300-RP-90-RS60-F0710	8048140
480	DFPD-480-RP-90-RS60-F1012	8048142

004 Torque [Nm]	Type	Part no.
Quarter turn actuators DFPD, double-acting		
10	DFPD-10-RP-90-RD-F03	8047613
	DFPD-10-RP-90-RD-F04	8048010
20	DFPD-20-RP-90-RD-F04	8047614
40	DFPD-40-RP-90-RD-F0507	8047615
80	DFPD-80-RP-90-RD-F0507	8047616
120	DFPD-120-RP-90-RD-F0507	8048123
160	DFPD-160-RP-90-RD-F0710	8048124
240	DFPD-240-RP-90-RD-F0710	8048125
300	DFPD-300-RP-90-RD-F0710	8048126
480	DFPD-480-RP-90-RD-F1012	8048127

Accessories

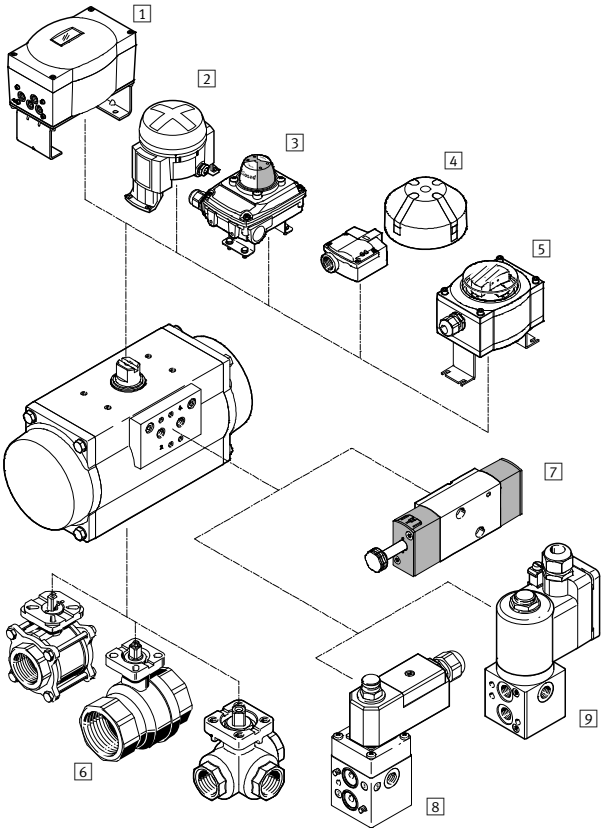

1 Positioner CMSX ➔ 259
2 Limit switch attachment DAPZ ➔ dapz
3 Sensor box SRBC ➔ 255
4 Sensor box SRBG ➔ 257
5 Sensor box SRAP ➔ srap
6 Ball valve VAPB ➔ vapb
Ball valve VZBA ➔ vzba
7 Solenoid valve VSNC ➔ 125
8 Solenoid valve VOFC ➔ vofc
9 Solenoid valve VOFD ➔ vofd

Ball valves QH

FESTO

- Fast, controllable non-return function
- Prevents pneumatic actuators from dropping down in the event of loss of compressed air
- With hand lever
- Pipe thread to ISO 228-1

Order code

001		002		003
QH	–		–	

Legend: Mandatory entry Optional entry

001	Type
QH	Ball valve

002	Pneumatic connection 1
1/4	Female thread G¼
3/8	Female thread G⅜
1/2	Female thread G½
3/4	Female thread G¾
1	Female thread G1
11/2	Female thread G1½

003	Pneumatic connection 2
–	Same size as pneumatic connection 1

Ordering – Basic design

002 Pneumatic connection 1	004 Pneumatic connection 2	Nominal size [mm]	Standard nominal flow rate qnN [l/min]	Type	Part no.
G¼	G¼	10	3400	QH-1/4	9541
G⅜	G⅜	10	7500	QH-3/8	9542
G½	G½	15	11500	QH-1/2	9543
G¾	G¾	20	21000	QH-3/4	9544
G1	G1	25	33000	QH-1	9545
G1½	G1½	40	84000	QH-11/2	6837

Angle seat valves VZXF

FESTO

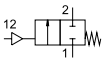

- Angle seat valves made of gunmetal (red brass) and stainless steel, fully assembled and directly actuated by compressed air supply
- Suitable for use with lightly contaminated media
- Can be used for steam applications
- Direct pilot air supply
- Selected types in accordance with ATEX directive for potentially explosive atmospheres → **www.festo.com/ex**

Order code

001	002	003	004	005	006	007	008	009	010	011	012	013	014	015
VZXF	L	M22C	M	B							50			

Legend: Mandatory entry; Optional entry

001	Type
VZXF	Angle seat valve, externally actuated

002	Type of directional control valve
L	In-line valve

003	Valve function
M22C	2/2-way valve, normally closed

004	Reset method for monostable valves
M	Mechanical spring

005	Media flow
B	Under valve seat, closes against the flow of media

006	Process valve connection
G12	Thread G½
G34	Thread G¾
G1	Thread G1

007	Nominal width		
120	12 mm	**180**	18 mm
130	13 mm	**230**	23 mm
160	16 mm	**240**	24 mm

008	Temperature range of medium
–	Standard, –10 … 80 °C
M1	–40 … 200 °C

009	Housing material
H3	Gunmetal (red brass)
V4	Stainless steel

010	Housing, drive material
B1	Brass
V4	Stainless steel

011	Material of sealing element
–	Standard, NBR
T	PTFE

012	Actuator size
50	50 mm

013	Medium pressure
10	Max. 10 bar
16	Max. 16 bar
20	Max. 20 bar
40	Max. 40 bar

014	Presence of PWIS[1)]
–	Standard

015	EU certification
–	None

1) PWIS: paint-wetting impairment substances

Product options

Process valve connection
- G1¼, G1½, G2

Housing, actuator material
- Aluminium
- Nickel-plated aluminium
- Nickel-plated brass

Media flow
- Over valve seat, closes with the flow of media

Material of sealing element
- Fluoro elastomer

Nominal width
- 29 … 45 mm

Actuator size
- 80 mm

Medium pressure
- Max. 3 … 25 bar
- –0.9 … 0 bar

Presence of PWIS
- Free of PWIS

EU certification
- II 2GD

FESTO

Ordering – Product options

Configurable product	**This product and all its product options can be ordered using the configurator.**	The configurator can be found under Products at ➔ **www.festo.com/catalogue/...**	Enter the type or the configuration part number in the search field.

Ordering

006 Process valve connection	Type	Part no.	Type	Part no.
012 Actuator size 50 mm				
	009 Gunmetal (red brass) design H3		**009 Stainless steel design V4**	
G½	VZXF-L-M22C-M-B-G12-120-H3B1-50-16	1002501	VZXF-L-M22C-M-B-G12-130-M1-V4V4T-50-40	1002513
	VZXF-L-M22C-M-B-G12-120-M1-H3B1T-50-16	3535620	VZXF-L-M22C-M-B-G12-130-M1-V4B2T-50-40	3539720
G¾	VZXF-L-M22C-M-B-G34-160-H3B1-50-16	1002503	VZXF-L-M22C-M-B-G34-180-M1-V4V4T-50-20	1002515
	VZXF-L-M22C-M-B-G34-160-M1-H3B1T-50-16	3535644	VZXF-L-M22C-M-B-G34-180-M1-V4B2T-50-20	3538842
G1	VZXF-L-M22C-M-B-G1-230-H3B1-50-10	1002505	VZXF-L-M22C-M-B-G1-240-M1-V4V4T-50-10	1002517
	VZXF-L-M22C-M-B-G1-230-M1-H3B1T-50-10	3535665	VZXF-L-M22C-M-B-G1-240-M1-V4B2T-50-10	3539783
012 Actuator size 80 mm				
	009 Gunmetal (red brass) design H3		**009 Stainless steel design V4**	
G1	VZXF-L-M22C-M-B-G1-230-M1-H3ALT-80-16	3540768	VZXF-L-M22C-M-B-G1-240-M1-V4V4T-80-22	1002526
			VZXF-L-M22C-M-B-G1-240-M1-V4ANT-80-22	3540198

Angle seat valves VZXA

FESTO

- Suitable for virtually all media
- High chemical and thermal resistance
- Modular design
- Hygienic design, insensitive to dirt
- Long service life
- Quick and easy maintenance
- High flow rates achievable
- Selected types in accordance with ATEX directive for potentially explosive atmospheres → **www.festo.com/ex**

Order code – Basic design

001	002	003	004	005	006	007	008	009	010	011	012	013	014	015	016	017
VZXA	B		T			M2		T		K					V4	

001	Type
VZXA	Process valve

002	Direction of flow
A	Above valve seat for gaseous media
B	Below valve seat for gaseous and liquid media

003	Control of the medium
–	On/off operation

004	Line connection
T	Threaded collar

005	Connection standard
S6	DIN ISO 228-1
S7	ANSI/ASME B 1.20.1
S13	DIN 10226-2

006	Connection size		
1/2"	1/2"	**13**	DN13
3/4"	3/4"	**20**	DN20
1"	1"	**25**	DN25
11/2"	1 1/2"	**32**	DN32
11/4"	1 1/4"	**40**	DN40
2"	2"	**50**	DN50

007	Temperature of medium
M2	–10 ... +180°C

008	Valve housing material
V13	Stainless steel 1.4409
V14	Stainless steel ASTM A351-CF3M

009	Seat seal material
T	PTFE

010	Medium pressure		
4	0 ... 4 bar	**9.3**	0 ... 9.3 bar
4.4	0 ... 4.4 bar	**10**	0 ... 10 bar
4.8	0 ... 4.8 bar	**12.2**	0 ... 12.2 bar
5.6	0 ... 5.6 bar	**12.8**	0 ... 12.8 bar
5.8	0 ... 5.8 bar	**13.5**	0 ... 13.5 bar
6	0 ... 6 bar	**14.5**	0 ... 14.5 bar
6.2	0 ... 6.2 bar	**15.5**	0 ... 15.5 bar
6.8	0 ... 6.8 bar	**16**	0 ... 16 bar
7.5	0 ... 7.5 bar	**23**	0 ... 23 bar
8	0 ... 8 bar	**25**	0 ... 25 bar
8.3	0 ... 8.3 bar	**30**	0 ... 30 bar

011	Actuator
K	Piston actuator

012	Actuator size
46	46 mm
75	75 mm

013	Stroke
17	17 mm
20	20 mm

014	Control function
–	Closed via spring force, NC
D	Double-acting
S	Opened via spring force, NO
PR	Closed via reduced spring force, NC

015	Position sensing
–	Via mechanical indicator

016	Actuator housing material
V4	Stainless steel 1.4408

017	EU certification
–	None
EX4	II 2GD

Legend: Mandatory entry Optional entry

FESTO

Ordering – Product options

Configurable product

This product and all its product options can be ordered using the configurator.

The configurator can be found under Products at
➔ **www.festo.com/catalogue/...**

Enter the type or the configuration part number in the search field.

Configuration part no.		
	Type	Part no.
Angle seat valve	VZXA	3539410

Ordering – Basic design

006 Connection size	Type	Part no.		006 Connection size	Type	Part no.
012 Actuator size 46 mm						
	005 Connection standard DIN ISO 228-1				**005 Connection standard ANSI/ASME B 1.20.1**	
DN13	VZXA-B-TS6-13-M2-V13T-30-K-46-17-V4	8060527		1/2''	VZXA-B-TS7-1/2"-M2-V14T-30-K-46-17-V4	8060541
DN20	VZXA-B-TS6-20-M2-V13T-12.8-K-46-17-V4	8060528		3/4''	VZXA-B-TS7-3/4"-M2-V14T-12.8-K-46-17-V4	8060542
DN25	VZXA-B-TS6-25-M2-V13T-8.3-K-46-17-V4	8060530		1''	VZXA-B-TS7-1"-M2-V14T-8.3-K-46-17-V4	8060544
012 Actuator size 75 mm						
	005 Connection standard DIN ISO 228-1				**005 Connection standard ANSI/ASME B 1.20.1**	
DN20	VZXA-B-TS6-20-M2-V13T-30-K-75-20-V4	8060529		3/4''	VZXA-B-TS7-1"-M2-V14T-23-K-75-20-V4	8060545
DN25	VZXA-B-TS6-25-M2-V13T-23-K-75-20-V4	8060531		1''	VZXA-B-TS7-3/4"-M2-V14T-30-K-75-20-V4	8060543

Solenoid valves VZWD, directly actuated

FESTO

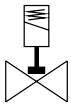

- Suitable for applications with high pressure and low flow rates
- Operating pressure 0 … 90 bar
- Nominal pressure 40 bar
- Flow rate Kv 0.06 … 0.4 m³/h
- Solenoid actuation

Order code

001	002	003	004	005	006	007	008	009	010	011
VZWD	L	M22C	M			V	1	P4		

Legend: Mandatory entry; Optional entry

001	Type
VZWD	Solenoid valve VZWD, directly actuated

002	Valve type
L	In-line valve

003	Valve function
M22C	2/2-way valve, normally closed, mechanical reset

004	Reset method
M	Mechanical spring

005	Process valve connection
G18	Thread G⅛
G14	Thread G¼

006	Nominal width		
10	1.0 mm	**40**	4.0 mm
20	2.0 mm	**60**	6.0 mm
30	3.0 mm		

007	Material of sealing element
V	Fluoro elastomer

008	Nominal operating voltage
1	24 V DC

009	Electrical connection
P4	Plug socket, 3-pin

010	Medium pressure
4	Max. 4 bar
8	Max. 8 bar
15	Max. 15 bar
50	Max. 50 bar

011	Corrosion protection
–	Brass
R1	Stainless steel

Product options

Nominal size
- 1.5 mm
- 2.5 mm
- 5.0 mm

Nominal operating voltage
- 110 V AC/50 – 60 Hz
- 230 V AC/50 – 60 Hz

Medium pressure
- Max. 5 bar, max. 22 bar, max. 30 bar, max. 40 bar, max. 85 bar, max. 90 bar

Ordering – Product options

Configurable product

This product and all its product options can be ordered using the configurator.

The configurator can be found under Products at
➔ **www.festo.com/catalogue/...**

Enter the type or the configuration part number in the search field.

FESTO

Ordering – Basic design

005 Process valve connection	006 Nominal width DN	010 Medium pressure[1]	Type	Part no.
008 Nominal operating voltage 24 V DC				
	011 Corrosion protection: brass			
G⅛	1.0 mm	0 … 50 bar	VZWD-L-M22C-M-G18-10-V-1P4-50	1491825
	2.0 mm	0 .. 15 bar	VZWD-L-M22C-M-G18-20-V-1P4-15	1491827
	3.0 mm	0 … 15 bar	VZWD-L-M22C-M-G18-30-V-1P4-15	1491836
	4.0 mm	0 … 8 bar	VZWD-L-M22C-M-G18-40-V-1P4-8	1491837
G¼	3.0 mm	0 … 15 bar	VZWD-L-M22C-M-G14-30-V-1P4-15	1491844
	4.0 mm	0 … 8 bar	VZWD-L-M22C-M-G14-40-V-1P4-8	1491845
	6.0 mm	0 … 4 bar	VZWD-L-M22C-M-G14-60-V-1P4-4	1491847
	011 Corrosion protection: stainless steel			
G⅛	3.0 mm	0 … 15 bar	VZWD-L-M22C-M-G18-30-V-1P4-15-R1	1491852
	4.0 mm	0 … 8 bar	VZWD-L-M22C-M-G18-40-V-1P4-8-R1	1491853
G¼	3.0 mm	0 … 15 bar	VZWD-L-M22C-M-G14-30-V-1P4-15-R1	1491860
	4.0 mm	0 … 8 bar	VZWD-L-M22C-M-G14-40-V-1P4-8-R1	1491861
	6.0 mm	0 … 4 bar	VZWD-L-M22C-M-G14-60-V-1P4-4-R1	1491863

1) The valves are suitable for vacuum with Pabs › 100 mbar. Please ensure the direction of flow corresponds to the direction of the arrow.

Solenoid valves VZWF, force pilot operated

FESTO

- Suitable for closed applications such as cooling or filling systems
- For control of gaseous and liquid media
- Operating pressure 0 … 10 bar
- Nominal pressure 40 bar
- Solenoid actuation

Order code

001		002		003		004		005		006		007		008	009		010		011
VZWF	–	B	–	L	–	M22C	–		–		–		–	1	P4	–		–	

Legend: Mandatory entry; Optional entry

001	Type
VZWF	Solenoid valve, force pilot operated

002	Product version
B	Optimised function

003	Valve type
L	In-line valve

004	Valve function
M22C	2/2-way valve, normally closed

005	Process valve connection		
G14	Thread G¼	**G34**	Thread G¾
G38	Thread G⅜	**G1**	Thread G1
G12	Thread G½		

006	Nominal width DN
135	13.5 mm
275	27.5 mm

007	Material of sealing element
–	Standard (NBR)

008	Nominal operating voltage
1	24 V DC

009	Electrical connection
P4	Plug socket, 3-pin

010	Medium pressure
6	Max. 6 bar
10	Max. 10 bar

011	Corrosion protection
–	Standard (brass)
R1	Stainless steel

Product options

Product version
– Standard

Process valve connection
– G1, G1¼, G1½, G2

Nominal width
– 40 mm
– 50 mm

Nominal operating voltage
– 110 V AC/50 – 60 Hz
– 230 V AC/50 – 60 Hz

Ordering – Product options

Configurable product

This product and all its product options can be ordered using the configurator.

The configurator can be found under Products at
➔ **www.festo.com/catalogue/...**

Enter the type or the configuration part number in the search field.

FESTO

Ordering – Basic design

005 Process valve connection	006 Nominal width DN	010 Medium pressure	Type	Part no.
008 Nominal operating voltage 24 V DC				
	007 Material of seal NBR, 011 Standard corrosion protection			
G¼	13.5 mm	0 … 10 bar	VZWF-B-L-M22C-G14-135-1P4-10	1492110
G⅜	13.5 mm	0 .. 10 bar	VZWF-B-L-M22C-G38-135-1P4-10	1492111
G½	13.5 mm	0 … 10 bar	VZWF-B-L-M22C-G12-135-1P4-10	1492112
G¾	27.5 mm	0 … 6 bar	VZWF-B-L-M22C-G34-275-1P4-6	1492113
G1	27.5 mm	0 … 6 bar	VZWF-B-L-M22C-G1-275-1P4-6	1492114
	007 Material of seal EPDM, 011 Stainless steel corrosion protection			
G¼	13.5 mm	0 … 10 bar	VZWF-B-L-M22C-G14-135-E-1P4-10-R1	1492134
G⅜	13.5 mm	0 .. 10 bar	VZWF-B-L-M22C-G38-135-E-1P4-10-R1	1492135
G½	13.5 mm	0 … 10 bar	VZWF-B-L-M22C-G12-135-E-1P4-10-R1	1492136
G¾	27.5 mm	0 … 6 bar	VZWF-B-L-M22C-G34-275-E-1P4-6-R1	1492137
G1	27.5 mm	0 … 6 bar	VZWF-B-L-M22C-G1-275-E-1P4-6-R1	1492138

Solenoid valves VZWM

FESTO

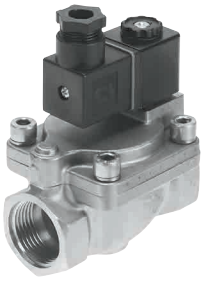

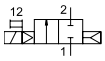

- Indirectly actuated poppet valve with diaphragm seal
- Flow rate 1400 … 31000 l/min
- Wide range of coils

Order code

001		002		003		004		005		006
VZWM	–	L	–	M22C	–		–	F4	–	

Legend: Mandatory entry Optional entry

001	Type
VZWM	Solenoid valve, process directional control valve

002	Valve type
L	In-line valve

003	Valve function
M22C	2/2-way valve, normally closed

004	Process valve connection		
G14	Thread G¼	**G34**	Thread G¾
G38	Thread G⅜	**G1**	Thread G1
G12	Thread G½		

005	Electrical connection
F4	With armature tube for solenoid coil MD-2- … -PA
F5	With armature tube for solenoid coil MH-2- … -PA

006	Corrosion protection
–	Standard (brass)
R1	Stainless steel

Product options

Process valve connection
– G1¼, G1½, G2

Electrical connection
With armature tube for solenoid coil
MH-2- … -PA

Corrosion protection
– Stainless steel

Ordering – Product options

Configurable product

This product and all its product options can be ordered using the configurator.

The configurator can be found under Products at
➔ **www.festo.com/catalogue/...**

Enter the type or the configuration part number in the search field.

Ordering – Basic design

004 Process valve connection	Type	Part no.	004 Process valve connection	Type	Part no.
	006 Standard corrosion protection			006 Stainless steel corrosion protection	
G¼	VZWM-L-M22C-G14-F4	546146	G¼	VZWM-L-M22C-G14-F5-R1	546162
G⅜	VZWM-L-M22C-G38-F4	546147	G⅜	VZWM-L-M22C-G38-F5-R1	546163
G½	VZWM-L-M22C-G12-F4	546148	G½	VZWM-L-M22C-G12-F5-R1	546164
G¾	VZWM-L-M22C-G34-F4	546149	G¾	VZWM-L-M22C-G34-F5-R1	546165
G1	VZWM-L-M22C-G1-F4	546150	G1	VZWM-L-M22C-G1-F5-R1	546166

Accessories

Solenoid coil MD		
Voltage	Type	Part no.
Solenoid coil for VZWM- ... -F4- ...		
DC 24 V	MD-2-24VDC-PA	549903

Solenoid coil MH		
Voltage	Type	Part no.
Solenoid coil for VZWM- ... -F5- ...		
DC 24 V	MH-2-24VDC-PA	549906
110 V AC, 50 ... 60 Hz	MH-2-110VAC-PA	549907
230 V AC, 50 ... 60 Hz	MH-2-230VAC-PA	549908

Plug socket MSSD		
Electrical connection	Type	Part no.
3-pin, square design MSF	MSSD-N	550067

Pinch valves VZQA

FESTO

- Housing made of aluminium, stainless steel (Clean Design)
- Material of seal EPDM, NBR, silicone
- For controlling fluid/powdery media, solids and material mixtures

Order code – Basic design

001	002	003	004	005	006	007	008	009	010	011
VZQA	C									

Legend: Mandatory entry | Optional entry

001	Type
VZQA	Pinch valve, pneumatically actuated

002	Product version
C	Easy-to-clean design

003	Valve function
M22C	2/2-way valve, normally closed
M22U	2/2-way valve, normally open

004	Nominal diameter DN
6	6 mm
15	15 mm
25	25 mm

005	Process valve connection type 1
G	G female thread
S5	Clamp to DIN 32676, series A

006	Process valve connection type 2
G	G female thread
S5	Clamp to DIN 32676, series A

007	Housing material
AL	Aluminium
V2	Stainless steel (chrome-nickel austenitic)
V4	Stainless steel (chrome-nickel-molybdenum, austenitic)

008	Housing cover material
AL	Aluminium
V4	Stainless steel (chrome-nickel-molybdenum, austenitic)
POM	Polyoxymethylene

009	Shut-off element material
E	EPDM
N	NBR

010	Pressure range of media
4	0 … 4 bar
6	0 … 6 bar

011	Sensing type
–	None
E	End positions

Product options

Process valve connection
- NPT female thread
- Clamp to ASME-BPE, type A
- Clamp to ASME-BPE, type B

Shut-off element material
- Silicone

Ordering – Product options

Configurable product

This product and all its product options can be ordered using the configurator.

The configurator can be found under Products at
➔ **www.festo.com/catalogue/...**

Enter the type or the configuration part number in the search field.

FESTO

Ordering – Product options

003 Valve function	004 Nominal diameter DN	010 Pressure range of media	Type	Part no.
2/2-way valve, normally open	Selectable	0 … 4 bar	VZQA-C-M22U-4	2037881
2/2-way valve, normally closed	15	0 … 6 bar	VZQA-C-M22C-15-6	3174282

Ordering – Basic design

003 Valve function	004 Nominal diameter DN	005 Process valve connection	Type	Part no.
2/2-way valve, normally open	6	Clamp to DIN 32676, series A	VZQA-C-M22U-6-S5S5-V4V4E-4	2931681
	15	Clamp to DIN 32676, series A	VZQA-C-M22U-15-S5S5-V4V4E-4	3022833
2/2-way valve, normally closed	15	Clamp to DIN 32676, series A	VZQA-C-M22C-15-S5S5-V2V4E-6	3412424
	15	Clamp to DIN 32676, series A	VZQA-C-M22C-15-S5S5-ALV4E-6-E	3412425
2/2-way valve, normally open	25	Clamp to DIN 32676, series A	VZQA-C-M22U-25-S5S5-V4V4E-4	3968924
2/2-way valve, normally open	6	G female thread G1/4	VZQA-C-M22U-6-GG-V4V4E-4	2931678
	6	G female thread G1/4	VZQA-C-M22U-6-GG-ALV4N-4	2931679
	15	G female thread G1/2	VZQA-C-M22U-15-GG-V4V4E-4	3022829
	15	G female thread G1/2	VZQA-C-M22U-15-GG-V4V4N-4	3022830
	15	G female thread G1/2	VZQA-C-M22U-15-GG-ALV4N-4	3022831
	15	G female thread G1/2	VZQA-C-M22U-15-GG-ALPOMN-4	3022832
	15	G female thread G1/2	VZQA-C-M22C-15-GG-V2V4E-6	3412426
	25	G female thread G1	VZQA-C-M22U-25-GG-V4V4E-4	3968922
	25	G female thread G1	VZQA-C-M22U-25-GG-ALALE-4	3968923

Accessories

Seal cartridge VAVC-Q2

	For valve function	Nominal diameter DN	Information on materials, shut-off element	Type	Part no.
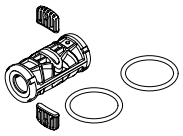	2/2-way valve, normally open	6	NBR	VAVC-Q2-M22U-6-N	2392881
			EPDM	VAVC-Q2-M22U-6-E	2392882
			VMQ (silicone)	VAVC-Q2-M22U-6-S1	2392883
		15	VMQ (silicone)	VAVC-Q2-M22U-15-S1	3019144
			EPDM	VAVC-Q2-M22U-15-E	3019148
			NBR	VAVC-Q2-M22U-15-N	3019151
		25	NBR	VAVC-Q2-M22U-25-N	3970092
			EPDM	VAVC-Q2-M22U-25-E	3970093
			VMQ (silicone)	VAVC-Q2-M22U-25-S1	3970094
	2/2-way valve, normally closed	15	EPDM	VAVC-Q2-M22C-15-E	3418619